BROADWAY STREET PUBLIC PIER REPLACEMENT

BROADWAY STREET AND BAYSIDE DRIVE
LONGBOAT KEY, FL 34228

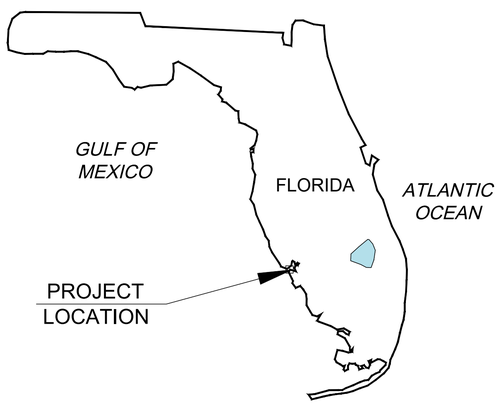

	SHEET INDEX	
	SHEET NUMBER	TITLE
	CM-1.0	COVER SHEET
	CM-1.1	GENERAL NOTES
	CM-1.2	EXISTING CONDITIONS
	CM-1.3	DEMOLITION PLAN
	CM-2.0	PROPOSED SITE PLAN
	CM-2.1	PILE AND FRAMING PLAN
	CM-2.2	PIER ELEVATION AND SECTIONS
	CM-2.3	MISCELLANEOUS DETAILS AND SECTIONS
	CM-3.0	TURBIDITY CURTAIN

Geoffrey M Parker
2025.04.22 13:44:56 '00'04-

GEOFFREY M. PARKER LICENSE No. 74043 STATE OF FLORIDA PROFESSIONAL ENGINEER

(1) This item has been electronically signed and sealed by Geoffrey M. Parker, P.E. using a Digital Signature and date. (2) Printed copies of this document are not considered signed and sealed and the signature must be verified on any electronic copies.

CLIENT:

WCIND

WEST COAST INLAND NAVIGATION DISTRICT
200 E. MIAMI AVE.
VENICE, FL 34285

OWNER:

TOWN OF LONGBOAT KEY
600 GENERAL HARRIS ST.
LONGBOAT KEY, FL 34228

ENGINEER:

CUMMINS | CEDERBERG
Coastal & Marine Engineering

MIAMI | FORT LAUDERDALE | JUPITER
SARASOTA | ST. PETERSBURG | TALLAHASSEE
TEL: +1 305-741-6155 FAX: 305-974-1969
WWW.CUMMINSCEDERBERG.COM

CONSTRUCTION DRAWINGS
04/09/2025

811 KNOW WHAT'S BELOW ALWAYS CALL 811 BEFORE YOU DIG
It's fast. It's free. It's the law.
www.callsunshine.com

\\10.10.0.2\cc\Projects\138805 Longboat Key Town Dock\03 - Drawings\BROADWAY STREET PUBLIC PIER REPLACEMENT\Construction\Working\(2025-04-04)C 138805 Longboat Key

1. GENERAL

1.1. THE WORK CONSISTS OF PROVIDING ALL CONSTRUCTION, LABOR, EQUIPMENT, MATERIAL, AND OPERATIONS IN CONNECTION WITH THE IN-KIND REPLACEMENT OF THE PIER AS SHOWN ON THESE DRAWINGS.
1.2. ANY DISCREPANCIES IN THE PLANS WITH THE FIELD CONDITIONS SHALL BE BROUGHT TO THE IMMEDIATE ATTENTION OF THE ENGINEER. CONSTRUCTION SHALL NOT CONTINUE UNTIL THE ENGINEER HAS ADDRESSED THE DISCREPANCIES.
1.3. THE CONTRACTOR SHALL TAKE ALL NECESSARY PRECAUTIONS TO PROTECT EXISTING STRUCTURES IN THE PROJECT VICINITY. ANY DAMAGE TO PRIVATE OR PUBLIC PROPERTY WITHIN THE PROJECT VICINITY, INCLUDING STAGING SITES, WORK AND ACCESS AREAS SHALL BE REPAIRED PROMPTLY BY THE CONTRACTOR. ANY DAMAGE AS A RESULT OF THE CONTRACTOR'S OPERATIONS SHALL BE REPAIRED AT NO COST TO THE OWNER. ALL ACCESS AND STAGING AREAS SHALL BE KEPT NEAT, ORDERLY AND IN A SAFE MANNER. ALL ACCESS AND STAGING AREAS SHALL BE RESTORED TO THE PRE-CONSTRUCTION CONDITION UPON PROJECT COMPLETION AT THE COST OF THE CONTRACTOR. THE SITE SHALL BE RESTORED BY REMOVING AND FINISHING ALL EVIDENCE FOR CONSTRUCTION. IN THE EVENT INFRASTRUCTURE (SUCH AS WALKWAYS, SIDEWALKS, FENCES, VEGETATION, ETC.) IS TEMPORARILY REMOVED OR RELOCATED OR THERE IS UNAUTHORIZED DAMAGE TO VEGETATION AND/OR FACILITIES BY THE CONTRACTOR, THE CONTRACTOR SHALL RESTORE ALL DAMAGE TO STRUCTURES AND NATURAL FEATURES TO PRE-CONSTRUCTION CONDITIONS OR BETTER.
1.4. UTILITIES ARE NOT SHOWN IN THE PLANS. CONTRACTOR IS RESPONSIBLE FOR LOCATING ALL PRESENT UTILITIES PRIOR TO CONSTRUCTION.
1.5. CONTRACTOR IS RESPONSIBLE FOR PROVIDING PROPER CLEARANCE AND PROTECTION TO ALL OVERHEAD WIRES AND OBSTRUCTIONS.
1.6. THE CONTRACTOR SHALL EXCLUDE THE PUBLIC FROM THE WORK AREAS IN THE IMMEDIATE VICINITY OF OPERATIONS. CONTRACTOR SHALL PROVIDE APPROPRIATE SAFETY MEASURES TO PROTECT THE PUBLIC.
1.7. NO CONSTRUCTION SHALL COMMENCE UNTIL ALL REQUIRED PERMITS AND APPROVALS HAVE BEEN SECURED AND THE CONTRACTOR HAS BEEN ISSUED NOTICE TO PROCEED.
1.8. ALL NEW STRUCTURAL WORK SHALL BE ACCURATELY FIELD MEASURED AND DIMENSIONS VERIFIED BY THE CONTRACTOR PRIOR TO ORDERING MATERIALS.
1.9. ATTENTION IS DIRECTED TO THE FACT THAT THESE PLANS MAY HAVE BEEN CHANGED IN SIZE BY REPRODUCTION. THIS SHOULD BE CONSIDERED WHEN OBTAINING SCALED DATA.
1.10. CONSTRUCTION WORK SHALL BE EXECUTED IN ACCORDANCE WITH ALL LOCAL, STATE, AND NATIONAL BUILDING CODES AND GOVERNING REGULATIONS. FDEP, USACE, AND MANATEE COUNTY. CONTRACTOR SHALL ADHERE TO ALL CONDITIONS OF THE PERMITS.

2. DESIGN CRITERIA

2.1. PIER LL = 100 PSF

2.2. UTILITIES DL = 5 PSF

2.3. WIND DESIGN CRITERIA
- 2.3.1. VULT = 149 MPH
- 2.3.2. VASD = 116 MPH
- 2.3.3. RISK CAT. II
- 2.3.4. EXP. CAT. D

2.4. SEA LEVEL RISE = 0.75' (25 YEAR) FROM TOWN OF LONGBOAT KEY SEA LEVEL RISE AND RECURRING FLOODING RESILIENCE PLAN UPDATE (2024)

2.5. DESIGN CODES:
- 2.5.1. FBC 2023
- 2.5.2. ASCE 7-22
- 2.5.3. AWC NDS 2018

3. SURVEY

3.1. SURVEY PERFORMED BY SURVTECH SOLUTIONS, INC. AND ISSUED ON FEBRUARY 12, 2025. ELEVATIONS ARE REFERENCED TO NORTH AMERICAN VERTICAL DATUM OF 1988 (NAVD88).

4. GEOTECHNICAL DATA

4.1. GEOTECHNICAL DATA REFERENCED FROM GEOTECHNICAL REPORT TITLED "GEOTECHNICAL ENGINEERING SERVICES REPORT FOR PROPOSED DOCK REPLACEMENT 6901 LOIS AVENUE LONGBOAT KEY, FLORIDA" ISSUED BY PROFESSIONAL SERVICE INDUSTRIES, INC. AND DATED SEPTEMBER 25, 2024.

5. TIDAL DATA

5.1. CONTRACTOR MAY NEED TO ADJUST WORK PLAN TO ACCOUNT FOR ACTUAL WATER LEVELS AND CHANGING WATER LEVELS. THE SITE MAY BE SUBJECT TO VARIABLE WAVE AND SURGE CONDITIONS AND IT IS THE RESPONSIBILITY OF THE CONTRACTOR TO PROVIDE TEMPORARY SUPPORT FOR MARINE STRUCTURES AND SHORELINE DURING CONSTRUCTION. TIDAL DATA OBTAINED FROM LONGBOAT KEY, FL , NOAA STATION ID 8726089.

6. LAYOUT & TESTING

6.1. ALL CONSTRUCTION STAKE OUT SHALL BE PERFORMED AND PAID FOR BY THE CONTRACTOR UNDER THE SUPERVISION OF A SURVEYOR REGISTERED IN THE STATE OF FLORIDA.
6.2. CONTRACTOR SHALL PROVIDE THE ENGINEER WITH A SET OF AS-BUILT DRAWINGS IN SUFFICIENT DETAIL TO ILLUSTRATE THE HORIZONTAL AND VERTICAL COMPONENTS OF ABOVE AND BELOW-WATER STRUCTURE RELATIVE TO THE CONSTRUCTION BASELINE. DRAWING SHALL BE SIGNED AND SEALED BY A FLORIDA-REGISTERED SURVEYOR.

7. DEMOLITION

7.2. CONTRACTOR SHALL VERIFY THE EXTENTS, LOCATION AND QUANTITIES OF EXISTING ELEMENTS TO BE REMOVED.
7.3. ALL DEBRIS WITHIN THE LIMITS OF THE PROJECT SHALL BE HAULED OFF SITE BY THE CONTRACTOR, AS DIRECTED BY THE OWNER, AND DISPOSED OF AT AN APPROPRIATE FACILITY.
7.4. CONTRACTOR SHALL NOT DAMAGE ANY STRUCTURAL COMPONENTS BEYOND THE DEMOLITION REQUIREMENTS DEPICTED IN THESE DRAWINGS. ANY DAMAGE SHALL BE REPAIRED AT THE CONTRACTOR'S EXPENSE.

8. ENVIRONMENTAL

8.1. CONTRACTOR SHALL COMPLY WITH ALL CONDITIONS OF THE ENVIRONMENTAL PERMITS FOR THE PROJECT.
8.2. EROSION CONTROL DEVICES SUCH AS TURBIDITY CURTAINS SHALL BE DEPLOYED TO MITIGATE RUNOFF INTO ADJACENT WATER BODIES. THE DEVICES SHALL NOT BE REMOVED UNTIL TURBIDITY LEVELS WITHIN THE CURTAIN MATCH LEVELS BEYOND THE CURTAIN.
8.3. CONSTRUCTION PERSONNEL SHALL OBSERVE ANY ESA-LISTED SPECIES OR MARINE MAMMALS. IF ANY INTERACTION OCCURS, THE INCIDENT WILL BE IMMEDIATELY REPORTED TO THE APPROPRIATE AGENCY. MECHANICAL EQUIPMENT SHALL CEASE IF A PROTECTED SPECIES IS OBSERVED WITHIN A 50-FOOT RADIUS OF CONSTRUCTION EQUIPMENT AND SHALL RESUME ONLY WHEN THE SPECIES HAS LEFT THE AREA OF ITS OWN VOLITION.
8.4. THE CONTRACTOR SHALL NOT STAGE EQUIPMENT IN A MANNER THAT WILL CAUSE DAMAGE TO ENVIRONMENTAL RESOURCES. STAGING EQUIPMENT SHALL AVOID THESE SENSITIVE AREAS. IF SUCH ACTIVITIES CANNOT BE DONE WITHOUT AFFECTING THESE SENSITIVE AREAS, THE ACTIVITIES SHALL CEASE AND THE ENGINEER SHALL BE NOTIFIED IMMEDIATELY (NO LATER THAN THE MORNING FOLLOWING THE NEXT WORKING DAY IF THE INCIDENT OCCURS AFTER NORMAL WORKING HOURS). ANY ACTUAL OR POTENTIAL INCIDENT INVOLVING DAMAGE TO, OR DISTURBANCE OF, ENVIRONMENTAL RESOURCES SHALL BE REPORTED.
8.5. BEST MANAGEMENT PRACTICES (BMPS) SHALL BE UTILIZED TO ENSURE DEMOLITION DEBRIS DOES NOT ENTER TIDAL WATERS.
8.6. ANY DEMOLITION DEBRIS ENTERING TIDAL WATERS SHALL BE IMMEDIATELY REMOVED FOR UPLAND DISPOSAL.

9. TIMBER PILING

9.1. ALL TIMBER PIER PILES TO BE SOUTHERN YELLOW PINE (SYP) AND COMPLY WITH ASTM D25-79 AND BE PRESSURE TREATED W/ CCA FEDERAL SPECS TT-W-550D(1) OR TT-W-00550E(1) AND AWFA-P-4.
9.2. PILES SHALL HAVE A MINIMUM DIAMETER OF 12 INCHES MEASURED 3 FEET FROM BUTT.
9.4. PILE DRIVING LOGS SHALL BE RECORDED FOR ALL DRIVEN PILES.
9.5. PIER PILES SHALL BE DRIVEN TO A MINIMUM BEARING CAPACITY OF 3.50 TONS AND TO DESIGN TIP ELEVATION SPECIFIED IN THESE PLANS UNLESS OTHERWISE APPROVED BY ENGINEER OF RECORD.
9.6. PILE JETTING OR PREDRILLING SHALL NOT BE PERFORMED FOR ANY DRIVEN PILE.

10. LUMBER

10.1. ALL DIMENSIONAL LUMBER SHALL BE PRESSURE TREATED SOUTHERN YELLOW PINE, NO. 1 DENSE GRADE OR BETTER AND COMPLY WITH AITC 109-69 SPECIFICATIONS U.N.O.
10.2. ALL LUMBER FRAMING CONNECTIONS TO BE INSTALLED WITHIN 1/4" TOLERANCE OF DIMENSIONS, SPACING, AND EDGE DISTANCES AS SPECIFIED IN THESE PLANS.

11. COMPOSITE LUMBER AND DECKING

11.1. COMPOSITE LUMBER SHALL BE MADE FROM A HIGH-DENSITY POLYETHYLENE MATERIAL WITH FIBERGLASS REINFORCEMENT.
11.2. COMPOSITE LUMBER COLOR SHALL BE SELECTED AND CONFIRMED WITH OWNER PRIOR TO CONSTRUCTION.
11.3. DECKING SHALL BE GAPPED 1/8" BETWEEN BOARDS.

12. HARDWARE

12.1. ALL HARDWARE, BOLTS, AND OTHER MISC. STEEL COMPONENTS SHALL BE ASTM A316 STAINLESS STEEL U. N. O.
12.2. DECK SCREWS SHALL BE #10, 3" SS, 2 PER JOIST SPACED AT 3 INCHES O.C. SPACE EVENLY AND CONSISTENTLY WITH CHALK LINE FOR NEAT DECK BOARD FINISH. PRE-DRILLING MAY BE REQUIRED.
12.3. TIMBER STRINGERS SHALL BE CONNECTED BY SIMPSON MTS12SS STRAPS OR APPROVED EQUAL STAGGERED WITH #10x3" SS DECK SCREWS. TWO (2) STRAP PER CONNECTION.

13. UTILITIES

13.1. CONTRACTOR SHALL CALL SUNSHINE 1-800-432-4770 PRIOR TO CONSTRUCTION.
13.2. NO PILE DRIVING SHALL TAKE PLACE WITHIN THE DESIGNATED CONSTRUCTION AREA UNTIL UTILITY LOCATIONS HAVE BEEN FIELD VERIFIED.
13.3. CONTRACTOR IS RESPONSIBLE FOR LOCATING ALL PRESENT UTILITIES PRIOR TO CONSTRUCTION.
13.4. PRIOR TO ANY SCHEDULED INTERRUPTION OF UTILITY SERVICE, THE CONTRACTOR WILL COORDINATE SUCH INTERRUPTION WITH THE UTILITY PROVIDER AND WILL PROVIDE A MINIMUM 24-HOUR NOTICE TO THE AFFECTED PARTIES.

14. SUBMITTALS

14.1. ALL SUBMITTALS MUST BEAR EVIDENCE OF THE CONTRACTOR'S APPROVAL PRIOR TO SUBMITTING TO THE ENGINEER.
14.2. THE FOLLOWING MINIMUM SUBMITTALS SHALL BE PREPARED BY THE CONTRACTOR AND SUBMITTED TO THE ENGINEER FOR REVIEW AND APPROVAL PRIOR TO RELATED CONSTRUCTION ACTIVITY:
14.2.1. SCHEDULE FOR COMPLETION OF WORK WITH TASKS AND
- DURATIONS DEFINED
- DEMOLITION METHODS AND DISPOSAL PLAN
- PILE DRIVING EQUIPMENT AND METHODOLOGY
- PILE DRIVING LOG
- TIMBER PILE
- COMPOSITE LUMBER AND DECKING
- DIMENSIONAL LUMBER
- PLUMBING FIXTURES AND ATTACHMENT DETAILS

14.3. THE FOLLOWING SPECIALTY ENGINEERED ITEMS SHALL BE IN THE FORM OF SHOP DRAWINGS SIGNED AND SEALED BY A LICENSED PROFESSIONAL ENGINEER AND SUBMITTED TO THE ENGINEER OF RECORD FOR REVIEW AND APPROVAL PRIOR TO RELATED CONSTRUCTION ACTIVITY:
- BOAT LIFT SHOP DRAWINGS AND PRODUCT DATA
- SECURITY GATE PRODUCT DATA SHEET AND CONNECTION SHOP DRAWINGS

ABBREVIATIONS	
APPROX.	APPROXIMATELY
ASTM	AMERICAN SOCIETY FOR TESTING AND MATERIALS
CLR	CLEAR
CONT	CONTINUOUS
CONT'D	CONTINUED
CY	CUBIC YARD
DEMO.	DEMOLISHED
ELEV./EL.	ELEVATION
EF	EACH FACE
EA	EACH
FDEP	FLORIDA DEPARTMENT OF ENVIRONMENTAL PROTECTION
FDOT	FLORIDA DEPARTMENT OF TRANSPORTATION
GFRP	GLASS FIBER REINFORCED POLYMER
H	HORIZONTAL
HDG	HOT DIPPED GALVANIZED
EMBED.	EMBEDMENT
EXIST.	EXISTING
KSI	KIPS PER SQUARE INCH
L.F.	LINEAR FEET
MAX	MEAN HIGH WATER
MIN	MINIMUM
MHW	MEAN HIGH WATER
MLW	MEAN LOW WATER
NAVD	NORTH AMERICAN VERTICAL DATUM
NGVD	NATIONAL GEODETIC VERTICAL DATUM
O.D.	OUTSIDE DIAMETER
PERA	PERMITTING, ENVIRONMENT, AND REGULATORY AFFAIRS
PSI	POUNDS PER SQUARE INCH
SQ	SQUARE
SPEC.	SPECIFICATION
STD.	STANDARD
TYP	TYPICAL
U.N.O.	UNLESS NOTED OTHERWISE
V	VERTICAL
W/C	WATER/CEMENT RATIO

SYMBOLS LEGEND

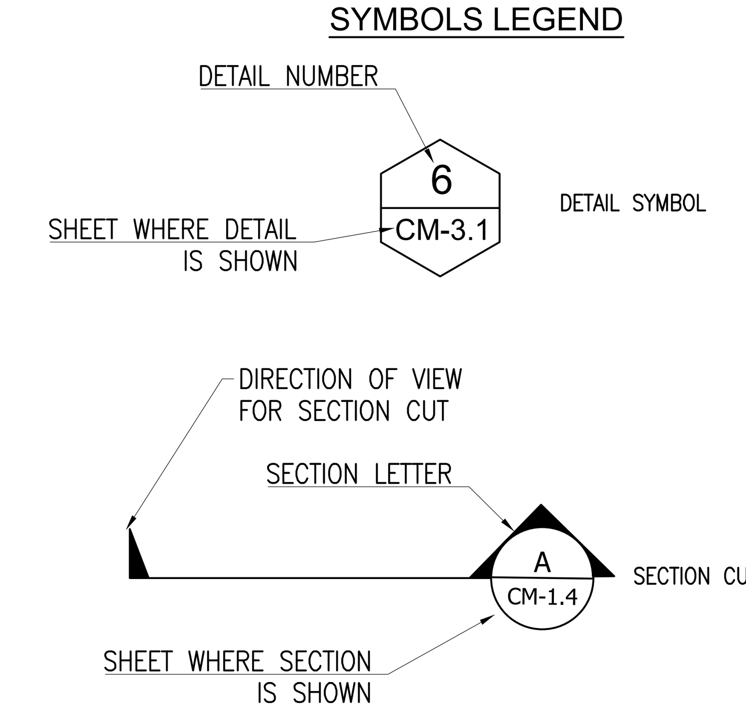

VERTICAL DATUM
NOAA Station ID 8726089

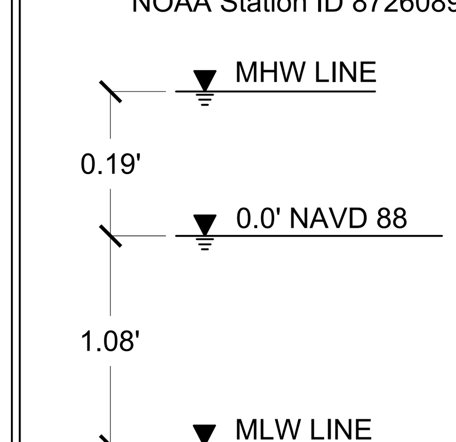

NOT TO SCALE

PROJECT:
BROADWAY STREET PUBLIC PIER REPLACEMENT
ADDRESS:
BROADWAY ST. AND BAYSIDE DR.
LONGBOAT KEY, FL 34228

CLIENT:
WEST COAST INLAND NAVIGATION DISTRICT
ADDRESS:
200 E. MIAMI AVE.
VENICE, FL 34285

OWNER:
TOWN OF LONGBOAT KEY
ADDRESS:
600 GENERAL HARRIS ST.
LONGBOAT KEY, FL 34228

ENGINEER:
CUMMINS CEDERBERG
COASTAL & MARINE ENGINEERING
201 ALHAMBRA CIRCLE, SUITE 601
CORAL GABLES, FL 33134
TEL: +1 305 741-6155 FAX: +1 305-974-1969
WWW.CUMMINSCEDERBERG.COM
COA # 29062
CUMMINS | CEDERBERG
Coastal & Marine Engineering

THIS ITEM HAS BEEN DIGITALLY SIGNED AND SEALED BY GEOFFREY M. PARKER ON THE DATE ADJACENT TO THE SIGNATURE.

PRINTED COPIES OF THIS DOCUMENT ARE NOT CONSIDERED SIGNED NOR SEALED. THE SIGNATURE MUST BE VERIFIED ON ANY ELECTRONIC COPIES.

SEAL:
GEOFFREY M. PARKER LICENSE No 74043 STATE OF FLORIDA PROFESSIONAL ENGINEER

Geoffrey M Parker
Digitally signed by Geoffrey M Parker
DN: c=US, o=Unaffiliated, dnQualifier=A01410C000001932AD1ADD500133F8E, cn=Geoffrey M Parker
Date: 2025.04.22 13:34:30 -04'00'

GEOFFREY M. PARKER, P.E. #74043

ISSUE	DATE	SUBMISSION / REVISION
1	04/09/2025	CONSTRUCTION DRAWINGS

CC PROJECT NO:	138805
DRAWN	SMJ
CHECKED	CLK
SCALE	AS SHOWN

SHEET TITLE
GENERAL NOTES

CM-1.1

\\10.10.0.2\cc\Projects\138805 Longboat Key Town Dock\03 - Drawings\BROADWAY STREET PUBLIC PIER REPLACEMENT\Construction\Working\(2025-04-04)C 138805 Longboat Key Town_Broadway St Public Pier.dwg

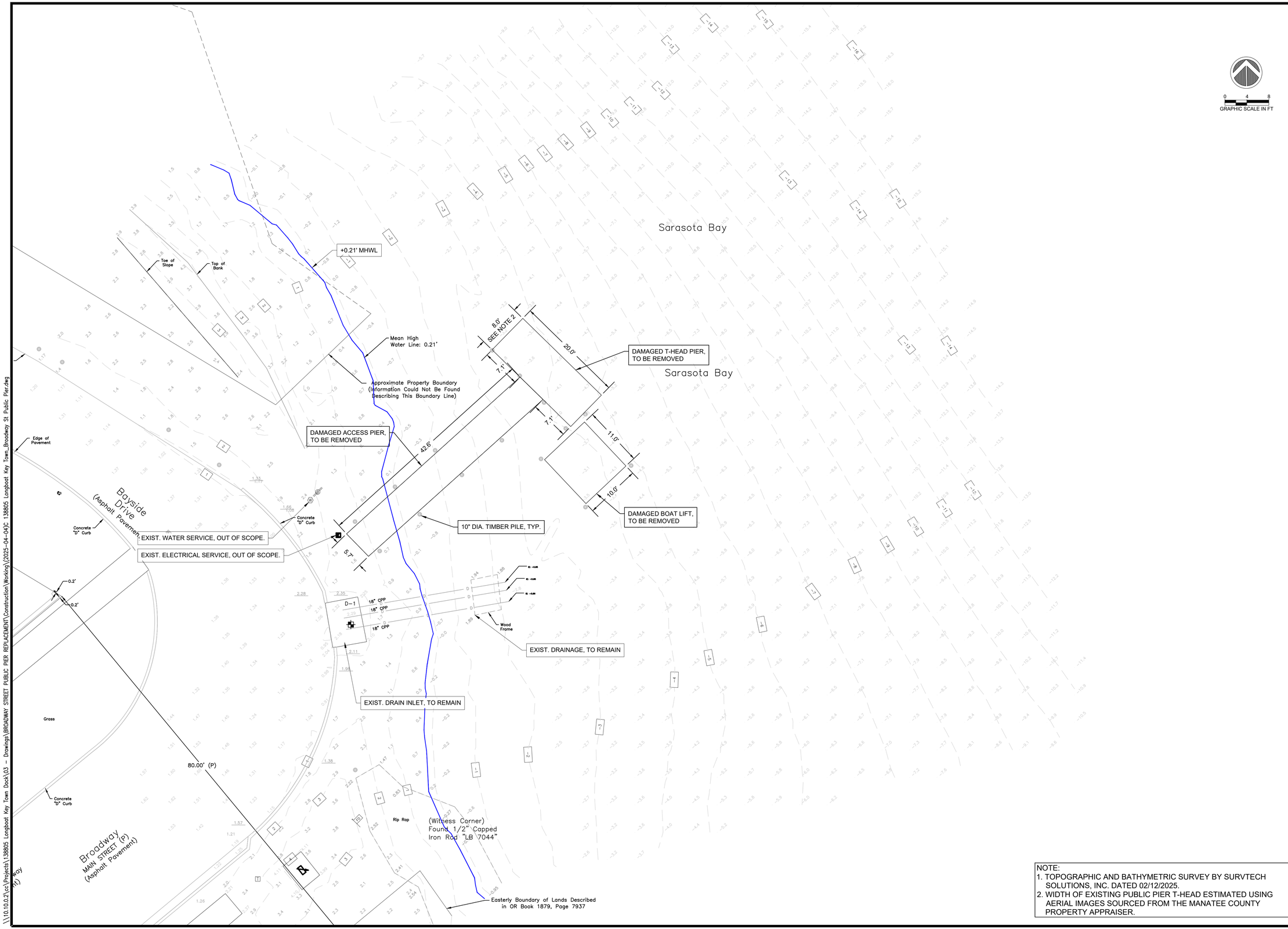

NOTE:
1. TOPOGRAPHIC AND BATHYMETRIC SURVEY BY SURVTECH SOLUTIONS, INC. DATED 02/12/2025.
2. WIDTH OF EXISTING PUBLIC PIER T-HEAD ESTIMATED USING AERIAL IMAGES SOURCED FROM THE MANATEE COUNTY PROPERTY APPRAISER.

PROJECT:
BROADWAY STREET PUBLIC PIER REPLACEMENT

ADDRESS:
BROADWAY ST. AND BAYSIDE DR.
LONGBOAT KEY, FL 34228

CLIENT:
WCIND
WEST COAST INLAND NAVIGATION DISTRICT
ADDRESS:
200 E. MIAMI AVE.
VENICE, FL 34285

OWNER:
TOWN OF LONGBOAT KEY
ADDRESS:
600 GENERAL HARRIS ST.
LONGBOAT KEY, FL 34228

ENGINEER:
CUMMINS CEDERBERG
COASTAL & MARINE ENGINEERING
201 ALHAMBRA CIRCLE, SUITE 601
CORAL GABLES, FL 33134
TEL: +1 305 741-6155 FAX: +1 305-974-1969
WWW.CUMMINSCEDERBERG.COM
COA # 29062
CUMMINS | CEDERBERG
Coastal & Marine Engineering

THIS ITEM HAS BEEN DIGITALLY SIGNED AND SEALED BY GEOFFREY M. PARKER ON THE DATE ADJACENT TO THE SIGNATURE.

PRINTED COPIES OF THIS DOCUMENT ARE NOT CONSIDERED SIGNED NOR SEALED. THE SIGNATURE MUST BE VERIFIED ON ANY ELECTRONIC COPIES.

SEAL:
GEOFFREY M. PARKER, LICENSED, No. 74043, STATE OF FLORIDA, PROFESSIONAL ENGINEER
Geoffrey M Parker
Digitally signed by Geoffrey M Parker
DN: c=US, o=Unaffiliated, dnQualifier=A01410C00000019320250500133F8E, cn=Geoffrey M Parker
Reason: I am the author of this document
Date: 2025.04.22 13:35:11 -04'00'
GEOFFREY M. PARKER, P.E. #74043

ISSUE	DATE	SUBMISSION / REVISION
1	04/09/2025	CONSTRUCTION DRAWINGS

CC PROJECT NO:	138805
DRAWN	SMJ
CHECKED	CLK
SCALE	AS SHOWN

SHEET TITLE
EXISTING CONDITIONS

CM-1.2

\\10.10.0.2\cc\Projects\138805 Longboat Key Town Dock\03 - Drawings\BROADWAY STREET PUBLIC PIER REPLACEMENT\Construction\Working\(2025-04-04)C 138805 Longboat Key Town_Broadway St Public Pier.dwg

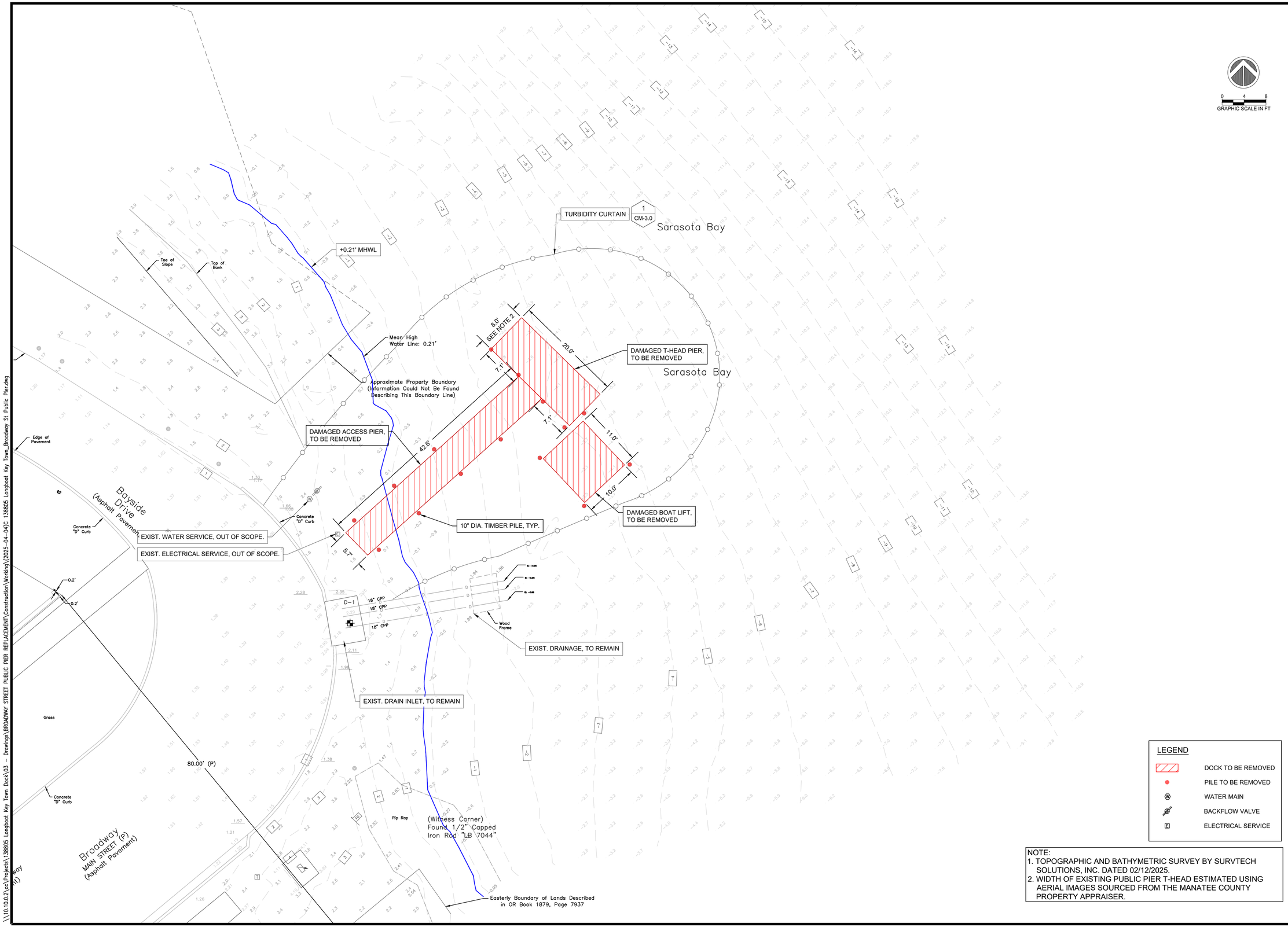

LEGEND

- DOCK TO BE REMOVED
- PILE TO BE REMOVED
- WATER MAIN
- BACKFLOW VALVE
- ELECTRICAL SERVICE

NOTE:
1. TOPOGRAPHIC AND BATHYMETRIC SURVEY BY SURVTECH SOLUTIONS, INC. DATED 02/12/2025.
2. WIDTH OF EXISTING PUBLIC PIER T-HEAD ESTIMATED USING AERIAL IMAGES SOURCED FROM THE MANATEE COUNTY PROPERTY APPRAISER.

PROJECT:
BROADWAY STREET PUBLIC PIER REPLACEMENT

ADDRESS:
BROADWAY ST. AND BAYSIDE DR.
LONGBOAT KEY, FL 34228

CLIENT:
WCIND
WEST COAST INLAND NAVIGATION DISTRICT
ADDRESS:
200 E. MIAMI AVE.
VENICE, FL 34285

OWNER:
TOWN OF LONGBOAT KEY
ADDRESS:
600 GENERAL HARRIS ST.
LONGBOAT KEY, FL 34228

ENGINEER:
CUMMINS CEDERBERG
COASTAL & MARINE ENGINEERING
201 ALHAMBRA CIRCLE, SUITE 601
CORAL GABLES, FL 33134
TEL: +1 305 741-6155 FAX: +1 305-974-1969
WWW.CUMMINSCEDERBERG.COM
COA # 29062
CUMMINS | CEDERBERG
Coastal & Marine Engineering

THIS ITEM HAS BEEN DIGITALLY SIGNED AND SEALED BY GEOFFREY M. PARKER ON THE DATE ADJACENT TO THE SIGNATURE.

PRINTED COPIES OF THIS DOCUMENT ARE NOT CONSIDERED SIGNED NOR SEALED. THE SIGNATURE MUST BE VERIFIED ON ANY ELECTRONIC COPIES.

SEAL:
GEOFFREY M. PARKER, LICENSE No. 74043, STATE OF FLORIDA, PROFESSIONAL ENGINEER

Geoffrey M Parker
Digitally signed by Geoffrey M Parker
DN: c=US, o=Unaffiliated, dnqualifier=A01410C00000932A0D1A9C0D133F8E, cn=Geoffrey M Parker
Date: 2025.04.22 13:36:06

GEOFFREY M. PARKER, P.E. #74043

ISSUE	DATE	SUBMISSION / REVISION
1	04/09/2025	CONSTRUCTION DRAWINGS

CC PROJECT NO:	138805
DRAWN	SMJ
CHECKED	CLK
SCALE	AS SHOWN

SHEET TITLE
DEMOLITION PLAN

CM-1.3

\\10.10.0.2\cd\Projects\138805 Longboat Key Town Dock\03 - Drawings\BROADWAY STREET PUBLIC PIER REPLACEMENT\Construction\Working\(2025-04-04)C 138805 Longboat Key Town_Broadway St Public Pier.dwg

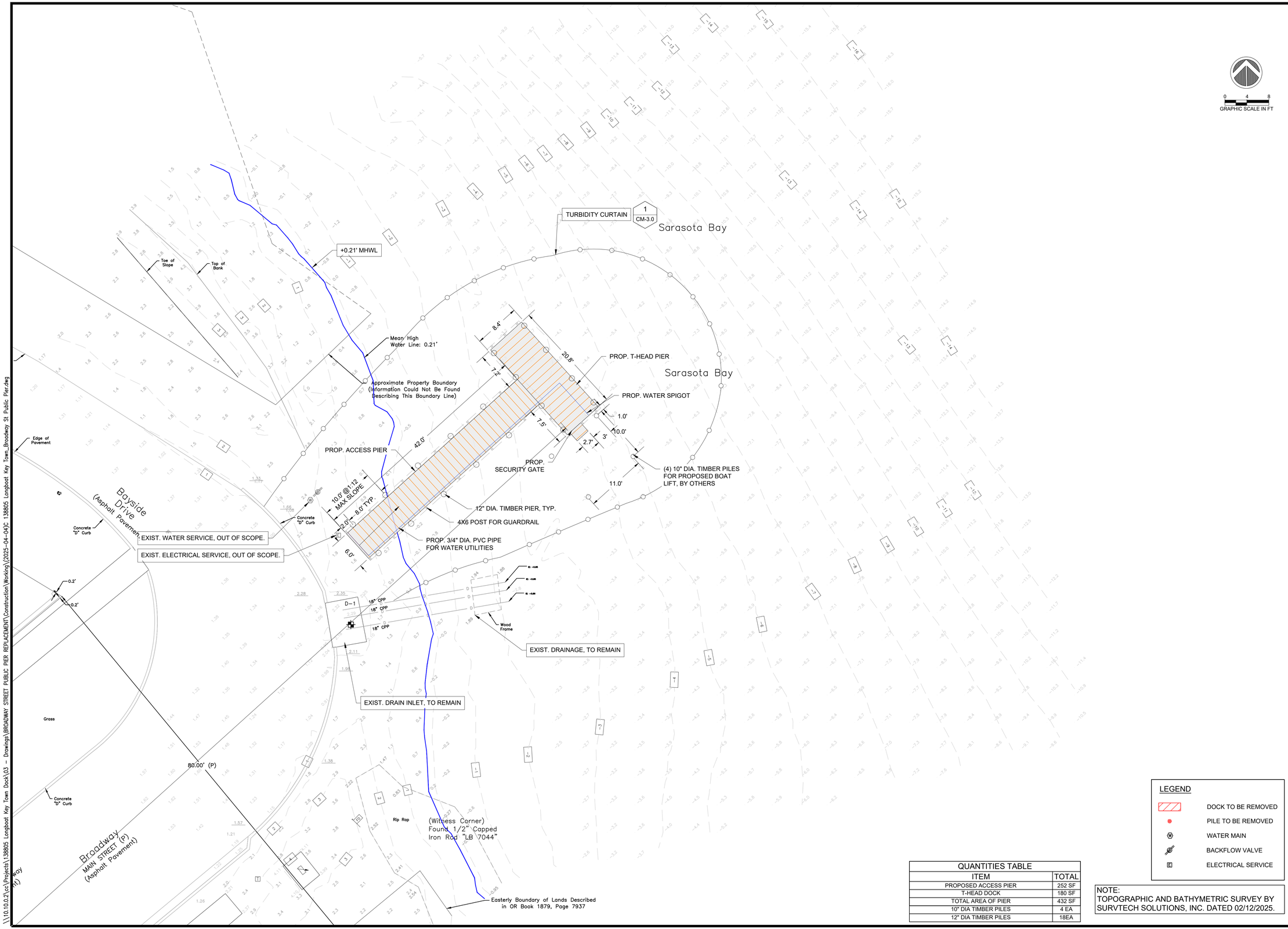

0 4 8
GRAPHIC SCALE IN FT

QUANTITIES TABLE	
ITEM	TOTAL
PROPOSED ACCESS PIER	252 SF
T-HEAD DOCK	180 SF
TOTAL AREA OF PIER	432 SF
10" DIA TIMBER PILES	4 EA
12" DIA TIMBER PILES	18EA

LEGEND

- DOCK TO BE REMOVED
- PILE TO BE REMOVED
- WATER MAIN
- BACKFLOW VALVE
- ELECTRICAL SERVICE

NOTE:
TOPOGRAPHIC AND BATHYMETRIC SURVEY BY SURVTECH SOLUTIONS, INC. DATED 02/12/2025.

PROJECT:
BROADWAY STREET PUBLIC PIER REPLACEMENT

ADDRESS:
BROADWAY ST. AND BAYSIDE DR.
LONGBOAT KEY, FL 34228

CLIENT:
WCIND
WEST COAST INLAND NAVIGATION DISTRICT
ADDRESS:
200 E. MIAMI AVE.
VENICE, FL 34285

OWNER:
TOWN OF LONGBOAT KEY
ADDRESS:
600 GENERAL HARRIS ST.
LONGBOAT KEY, FL 34228

ENGINEER:
CUMMINS CEDERBERG
COASTAL & MARINE ENGINEERING
201 ALHAMBRA CIRCLE, SUITE 601
CORAL GABLES, FL 33134
TEL: +1 305 741-6155 FAX: +1 305-974-1969
WWW.CUMMINSCEDERBERG.COM
COA # 29062
CUMMINS | CEDERBERG
Coastal & Marine Engineering

THIS ITEM HAS BEEN DIGITALLY SIGNED AND SEALED BY GEOFFREY M. PARKER ON THE DATE ADJACENT TO THE SIGNATURE.

PRINTED COPIES OF THIS DOCUMENT ARE NOT CONSIDERED SIGNED NOR SEALED. THE SIGNATURE MUST BE VERIFIED ON ANY ELECTRONIC COPIES.

SEAL:
GEOFFREY M. PARKER LICENSE No. 74043 STATE OF FLORIDA PROFESSIONAL ENGINEER
Geoffrey M Parker
Digitally signed by Geoffrey M Parker
DN: C=US, o=Unaffiliated, dnQualifier=A01410C0000019
0170D8B3E0A3C5F8E, cn=Geoffrey M Parker
Date: 2025.04.22 13:37:22
GEOFFREY M. PARKER, P.E. #74043

ISSUE	DATE	SUBMISSION / REVISION
1	04/09/2025	CONSTRUCTION DRAWINGS

CC PROJECT NO:	138805
DRAWN	SMJ
CHECKED	CLK
SCALE	AS SHOWN

SHEET TITLE
PROPOSED PLAN

CM-2.0

\\10.10.0.2\cc\Projects\138805 Longboat Key Town Dock\03 - Drawings\BROADWAY STREET PUBLIC PIER REPLACEMENT\Construction\Working\2025-04-04\C 138805 Longboat Key Town_Broadway St Public Pier.dwg

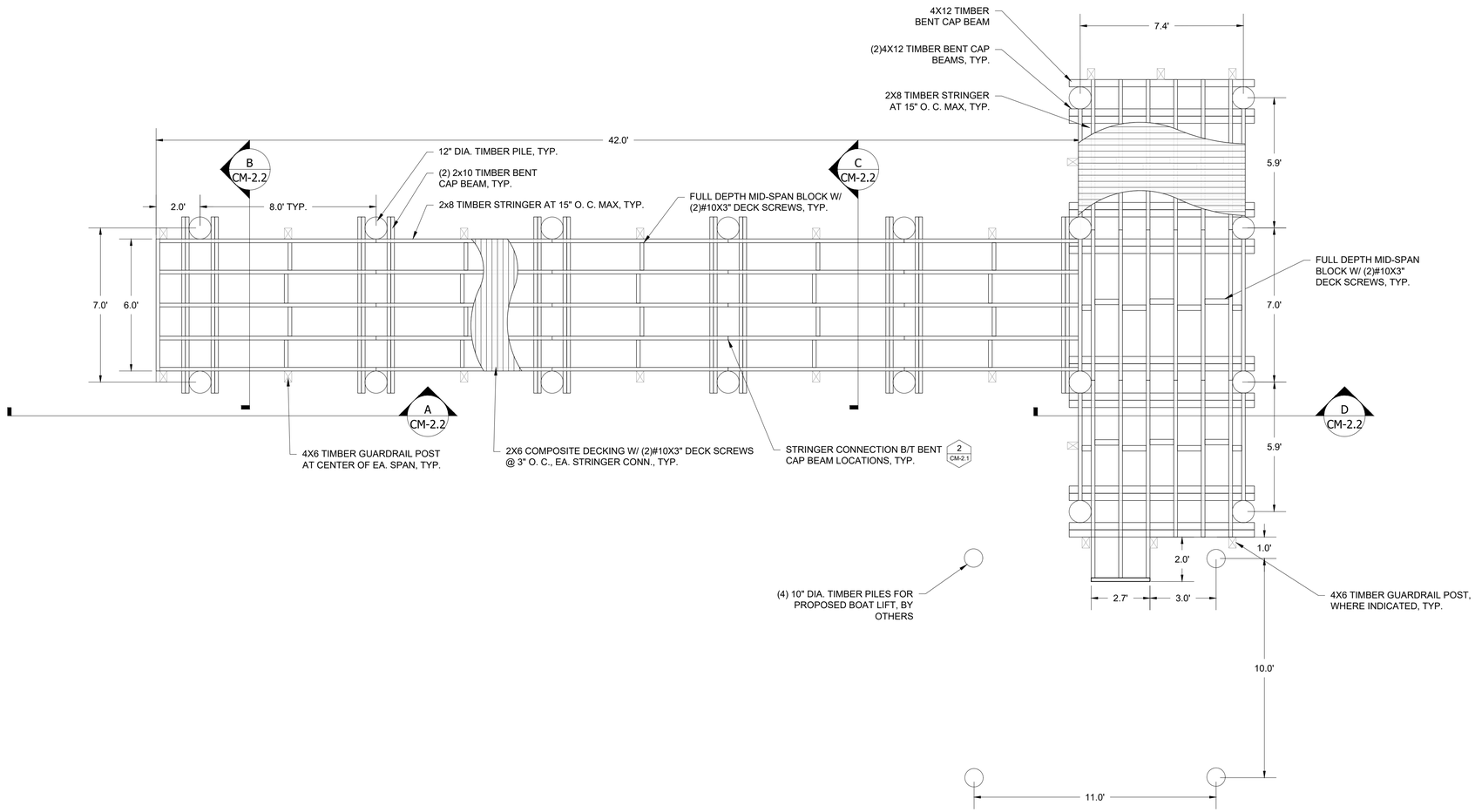

PROPOSED FRAMING PLAN

SCALE: 1" = 3'

PROJECT:

BROADWAY STREET PUBLIC PIER REPLACEMENT

ADDRESS:
BROADWAY ST. AND BAYSIDE DR.
LONGBOAT KEY, FL 34228

CLIENT:

WCIND

WEST COAST INLAND NAVIGATION DISTRICT

ADDRESS:
200 E. MIAMI AVE.
VENICE, FL 34285

OWNER:

TOWN OF LONGBOAT KEY

ADDRESS:
600 GENERAL HARRIS ST.
LONGBOAT KEY, FL 34228

ENGINEER:

CUMMINS CEDERBERG

COASTAL & MARINE ENGINEERING

201 ALHAMBRA CIRCLE, SUITE 601
CORAL GABLES, FL 33134
TEL: +1 305 741-6155 FAX: +1 305-974-1969
WWW.CUMMINSCEDERBERG.COM

COA # 29062

CUMMINS | CEDERBERG
Coastal & Marine Engineering

THIS ITEM HAS BEEN DIGITALLY SIGNED AND SEALED BY GEOFFREY M. PARKER ON THE DATE ADJACENT TO THE SIGNATURE.

PRINTED COPIES OF THIS DOCUMENT ARE NOT CONSIDERED SIGNED NOR SEALED. THE SIGNATURE MUST BE VERIFIED ON ANY ELECTRONIC COPIES.

SEAL:

GEOFFREY M. PARKER LICENSE No. 74043 STATE OF FLORIDA

Geoffrey M Parker

Digitally signed by Geoffrey M Parker
DN: c=US, o=Unaffiliated, dnqualifier=G01E8C000001932, Ref=LMT0001A9SE, cn=Geoffrey M Parker
Date: 2025.04.22 13:39:07 -04'00'

GEOFFREY M. PARKER, P.E. #74043

ISSUE	DATE	SUBMISSION / REVISION
1	04/09/2025	CONSTRUCTION DRAWINGS

CC PROJECT NO:	138805
DRAWN	SMJ
CHECKED	CLK
SCALE	AS SHOWN

SHEET TITLE

PILE AND FRAMING PLAN

CM-2.1

\\10.10.0.2\cc\Projects\138805 Longboat Key Town Dock\03 - Drawings\BROADWAY STREET PUBLIC PIER REPLACEMENT\Construction\Working\(2025-04-04)C 138805 Longboat Key Town_Broadway St Public Pier.dwg

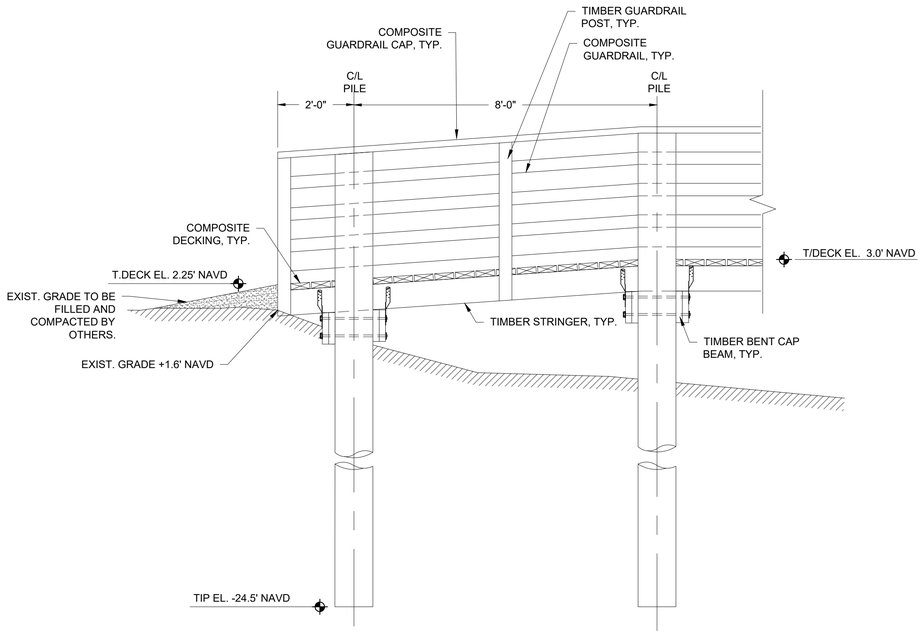

A / CM-2.1 ACCESS PIER APPROACH ELEVATION

SCALE: 1" = 2'

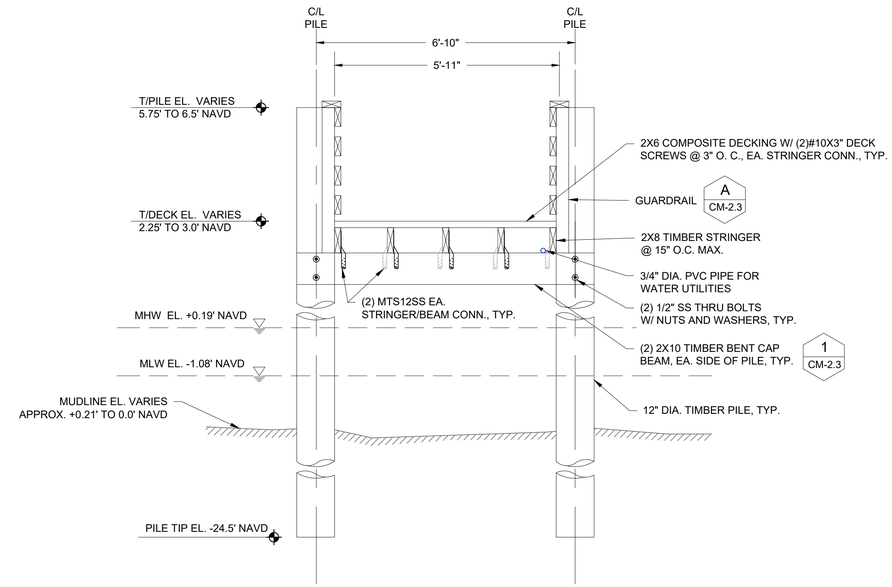

B / CM-2.1 ACCESS PIER APPROACH TYPICAL SECTION

SCALE: 1" = 2'

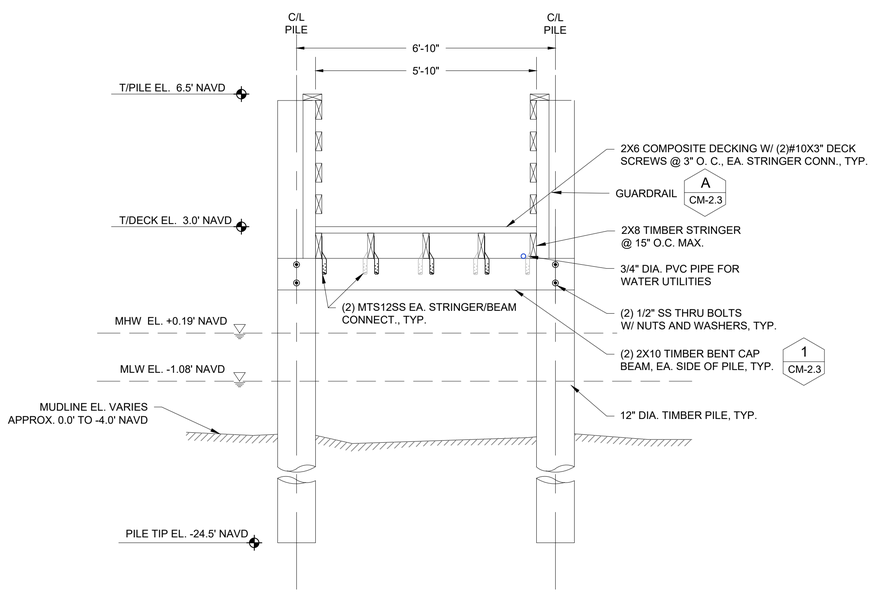

C / CM-2.1 ACCESS PIER TYPICAL SECTION

SCALE: 1" = 2'

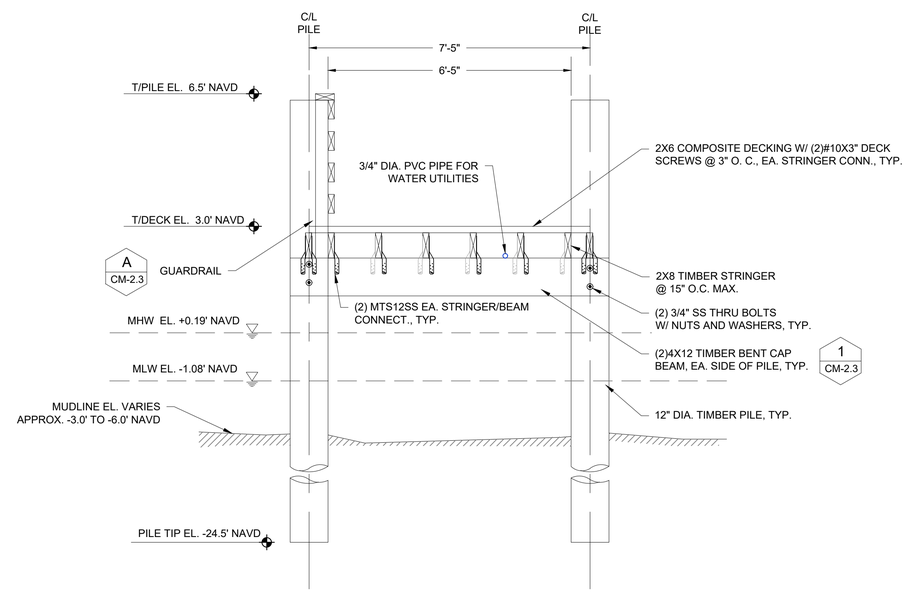

D / CM-2.1 T-HEAD PIER TYPICAL SECTION

SCALE: 1" = 2'

PROJECT:
BROADWAY STREET PUBLIC PIER REPLACEMENT

ADDRESS:
BROADWAY ST. AND BAYSIDE DR.
LONGBOAT KEY, FL 34228

CLIENT:
WCIND
WEST COAST INLAND NAVIGATION DISTRICT
ADDRESS:
200 E. MIAMI AVE.
VENICE, FL 34285

OWNER:
TOWN OF LONGBOAT KEY
ADDRESS:
600 GENERAL HARRIS ST.
LONGBOAT KEY, FL 34228

ENGINEER:
CUMMINS CEDERBERG
COASTAL & MARINE ENGINEERING
201 ALHAMBRA CIRCLE, SUITE 601
CORAL GABLES, FL 33134
TEL: +1 305 741-6155 FAX: +1 305-974-1969
WWW.CUMMINSCEDERBERG.COM
COA # 29062
CUMMINS | CEDERBERG
Coastal & Marine Engineering

THIS ITEM HAS BEEN DIGITALLY SIGNED AND SEALED BY GEOFFREY M. PARKER ON THE DATE ADJACENT TO THE SIGNATURE.

PRINTED COPIES OF THIS DOCUMENT ARE NOT CONSIDERED SIGNED NOR SEALED. THE SIGNATURE MUST BE VERIFIED ON ANY ELECTRONIC COPIES.

SEAL:
GEOFFREY M. PARKER LICENSE No. 74043 STATE OF FLORIDA
Geoffrey M Parker
Digitally signed by Geoffrey M Parker
DN: C=US, o=Not Applicable, dnQualifier=A01410C0000019AAD1A0000013F8E, cn=Geoffrey M Parker
Date: 2025.04.22 13:39:43 -04'00'
GEOFFREY M. PARKER, P.E. #74043

ISSUE	DATE	SUBMISSION / REVISION
1	04/09/2025	CONSTRUCTION DRAWINGS

CC PROJECT NO:	138805
DRAWN	SMJ
CHECKED	CLK
SCALE	AS SHOWN

SHEET TITLE
PIER ELEVATION AND SECTIONS

CM-2.2

\\10.10.0.2\cc\Projects\138805 Longboat Key Town Dock\03 - Drawings\BROADWAY STREET PUBLIC PIER REPLACEMENT\Construction\Working\(2025-04-04)C 138805 Longboat Key Town_Broadway St Public Pier.dwg

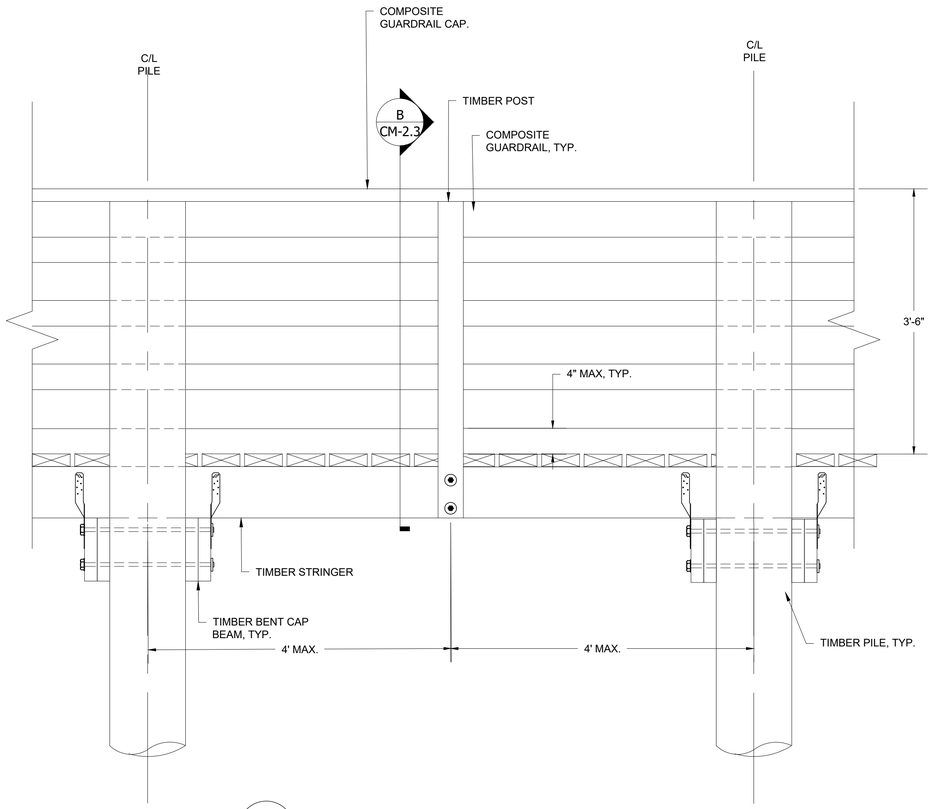

A CM-2.2 TYPICAL GUARDRAIL ELEVATION DETAIL

SCALE: 1" = 2'

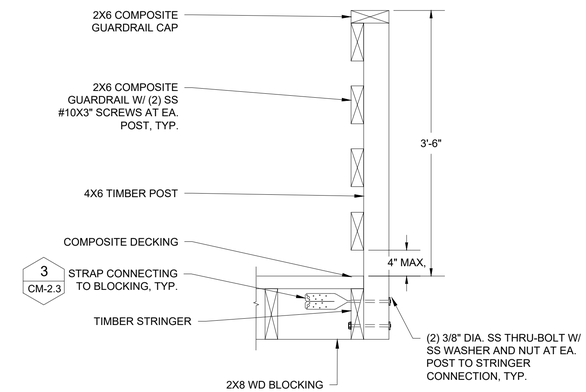

B CM-2.3 TYPICAL GUARDRAIL SECTION

SCALE: 1" = 1'

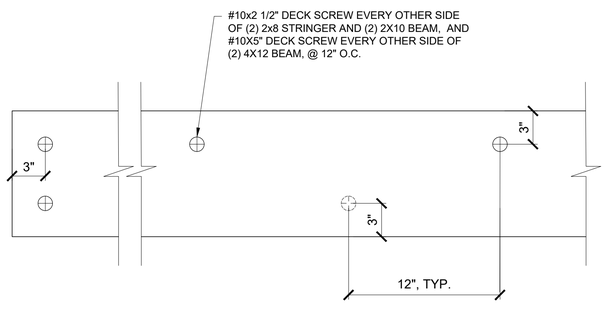

1 CM-2.2 BUILT-UP DOUBLE STRINGER AND BEAM CONN. DETAIL

SCALE: N.T.S

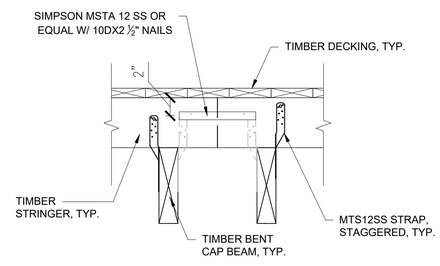

2 CM-2.1 JOIST CONNECTION DETAIL

SCALE: 1' = 1"

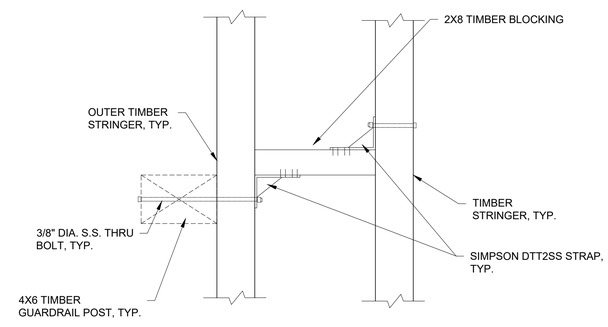

3 CM-2.3 POST BLOCKING CONNECTION DETAIL

SCALE: 1'= 1/2"

PROJECT:
BROADWAY STREET PUBLIC PIER REPLACEMENT

ADDRESS:
BROADWAY ST. AND BAYSIDE DR.
LONGBOAT KEY, FL 34228

CLIENT:
WCIND
WEST COAST INLAND NAVIGATION DISTRICT
ADDRESS:
200 E. MIAMI AVE.
VENICE, FL 34285

OWNER:
TOWN OF LONGBOAT KEY
ADDRESS:
600 GENERAL HARRIS ST.
LONGBOAT KEY, FL 34228

ENGINEER:
CUMMINS CEDERBERG
COASTAL & MARINE ENGINEERING
201 ALHAMBRA CIRCLE, SUITE 601
CORAL GABLES, FL 33134
TEL: +1 305 741-6155 FAX: +1 305-974-1969
WWW.CUMMINSCEDERBERG.COM
COA # 29062
CUMMINS | CEDERBERG
Coastal & Marine Engineering

THIS ITEM HAS BEEN DIGITALLY SIGNED AND SEALED BY GEOFFREY M. PARKER ON THE DATE ADJACENT TO THE SIGNATURE.

PRINTED COPIES OF THIS DOCUMENT ARE NOT CONSIDERED SIGNED NOR SEALED. THE SIGNATURE MUST BE VERIFIED ON ANY ELECTRONIC COPIES.

SEAL:
GEOFFREY M. PARKER LICENSE No. 74043 STATE OF FLORIDA PROFESSIONAL ENGINEER

Geoffrey M Parker
Digitally signed by Geoffrey M Parker
DN: c=US, o=Unaffiliated, dnQualifier=A01410C0000019324DA0C0C5E0233F8E, cn=Geoffrey M Parker
2025-04-22 13:40:31

GEOFFREY M. PARKER, P.E. #74043

SUBMISSION / REVISION	DATE	ISSUE
CONSTRUCTION DRAWINGS	04/09/2025	1

CC PROJECT NO:	138805
DRAWN	SMJ
CHECKED	CLK
SCALE	AS SHOWN

SHEET TITLE
MISCELLANEOUS DETAILS AND SECTIONS

CM-2.3

\\10.10.0.2\cc\Projects\138805 Longboat Key Town Dock\03 - Drawings\BROADWAY STREET PUBLIC PIER REPLACEMENT\Construction\Working\(2025-04-04)C 138805 Longboat Key Town_Broadway St Public Pier.dwg

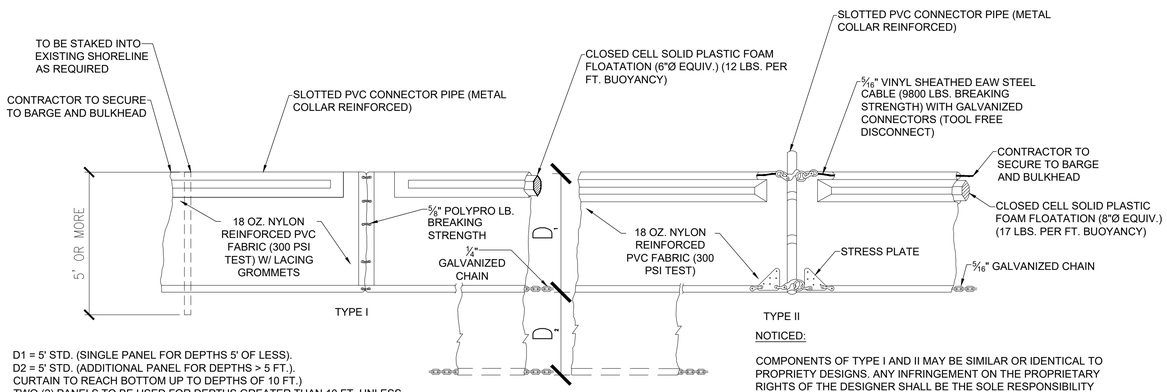

D1 = 5' STD. (SINGLE PANEL FOR DEPTHS 5' OF LESS).
D2 = 5' STD. (ADDITIONAL PANEL FOR DEPTHS > 5 FT.).
CURTAIN TO REACH BOTTOM UP TO DEPTHS OF 10 FT.)
TWO (2) PANELS TO BE USED FOR DEPTHS GREATER THAN 10 FT. UNLESS SPECIAL DEPTH CURTAINS SPECIFICALLY CALLED FOR IN THE PLANS OR AS DETERMINED BY THE ENGINEER.

NOTICED:

COMPONENTS OF TYPE I AND II MAY BE SIMILAR OR IDENTICAL TO PROPRIETY DESIGNS. ANY INFRINGEMENT ON THE PROPRIETARY RIGHTS OF THE DESIGNER SHALL BE THE SOLE RESPONSIBILITY OF THE USER. SUBSTITUTIONS FOR TYPE I AND II SHALL BE AS APPROVED BY THE ENGINEER.

1 / CM-2.0 FLOATING TURBIDITY BARRIER

SCALE: N.T.S

PROJECT:
BROADWAY STREET PUBLIC PIER REPLACEMENT

ADDRESS:
BROADWAY ST. AND BAYSIDE DR.
LONGBOAT KEY, FL 34228

CLIENT:
WCIND
WEST COAST INLAND NAVIGATION DISTRICT
ADDRESS:
200 E. MIAMI AVE.
VENICE, FL 34285

OWNER:
TOWN OF LONGBOAT KEY
ADDRESS:
600 GENERAL HARRIS ST.
LONGBOAT KEY, FL 34228

ENGINEER:
CUMMINS CEDERBERG
COASTAL & MARINE ENGINEERING
201 ALHAMBRA CIRCLE, SUITE 601
CORAL GABLES, FL 33134
TEL: +1 305 741-6155 FAX: +1 305-974-1969
WWW.CUMMINSCEDERBERG.COM
COA # 29062
CUMMINS | CEDERBERG
Coastal & Marine Engineering

THIS ITEM HAS BEEN DIGITALLY SIGNED AND SEALED BY GEOFFREY M. PARKER ON THE DATE ADJACENT TO THE SIGNATURE.

PRINTED COPIES OF THIS DOCUMENT ARE NOT CONSIDERED SIGNED NOR SEALED. THE SIGNATURE MUST BE VERIFIED ON ANY ELECTRONIC COPIES.

SEAL:
GEOFFREY M. PARKER LICENSE No. 74043 STATE OF FLORIDA PROFESSIONAL ENGINEER
Geoffrey M Parker
Digitally signed by Geoffrey M Parker DN: cn=Geoffrey M Parker, o=Cummins Cederberg, ou=Qualified, email=gparker@cummins-cederberg.com, c=US, 2.16.840.1.113883.3.4=2001933AD1A0C5B9E1E4E3A3C2C0B5, 2.16.840.1.113883.4.1=74043 Date: 2025.04.09 09:45:55 -04'00'
GEOFFREY M. PARKER, P.E. #74043

ISSUE	DATE	SUBMISSION / REVISION
1	04/09/2025	CONSTRUCTION DRAWINGS

CC PROJECT NO:	138805
DRAWN	SMJ
CHECKED	CLK
SCALE	AS SHOWN

SHEET TITLE
TURBIDITY CURTAIN

CM-3.0

\\10.10.0.2\cc\Projects\138805 Longboat Key Town Dock\03 - Drawings\BROADWAY STREET PUBLIC PIER REPLACEMENT\Construction\Working\(2025-04-04)C 138805 Longboat Key Town_Broadway St Public Pier.dwg