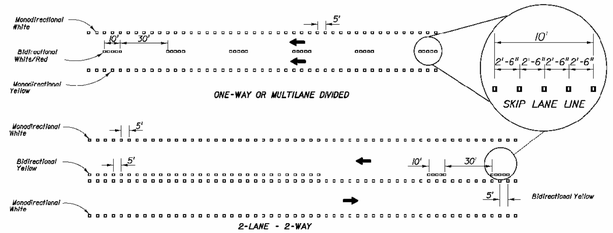

TEMPORARY SUBSTITUTION OF RPM'S FOR PAINT OR REMOVABLE TAPE

1. Paint or removable tape are the required work zone markings and shall be placed in accordance with the plans and specifications. If these work zone markings can not be placed due to weather restrictions identified in the appropriate specification, temporary substitution of RPM's for work zone markings will be allowed until the weather condition permits the placement of appropriate work zone marking. Temporary substitution of RPM's for work zone markings will be allowed for equipment malfunction, placement of the appropriate work zone marking shall be made within 3 days, or sooner if possible. When RPM's are used as a temporary substitution for work zone markings the following shall apply:
   a) Lane widths identified in the plans must be maintained. Placement of RPM's should consider where work zone markings will be placed as soon as conditions allow. If the RPM's can not be placed so that the lane width is maintained after the placement of the work zone markings, the conflicting RPM's must be removed.
   b) The color of the RPM body and the reflective face shall conform to the color of the marking for which they substitute.
   c) In work zones, CLASS A, B or D RPM's may be used to form lane lines, edge lines and temporary gore areas as a temporary substitute for paint or removable tape at the spacing shown above. Where the RPM's will be used for five (5) days or less, CLASS E RPM's may be used.

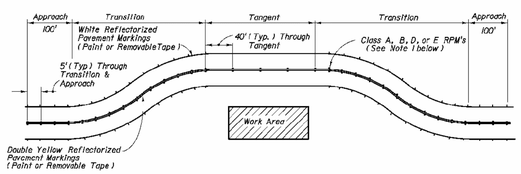

USE OF RPMS TO SUPPLEMENT PAINT OR REMOVABLE TAPE IN WORK ZONES

1. RPM's shall be installed as a supplement to:
   a) All lane lines.
   b) Edge lines in transition & approach areas.
   c) Edge lines at gore areas.
2. Placement of RPM's should be as shown in Index No. 17352 with the following exceptions: RPM's shall be placed at 5 feet center to center in approach and transition areas. Class D markers be placed at a maximum spacing of 5 feet center to center.

RPM CLASS	APPLICATION FOR REFLECTIVE PAVEMENT MARKERS
A	Permanent Applications In Nontraffic Areas Or Can Be Used In Work Zone Applications For Traffic And Nontraffic Areas.
B	Permanent Application In Traffic And Nontraffic Areas Or Can Be Used In Work Zone Applications For Traffic And Nontraffic Areas.
D	Work Zone Application Only, For Traffic And Nontraffic Areas.
E	Temporary Work Zone Application Only, Not Exceeding Five (5) Continuous Days, For Traffic And Nontraffic Areas.

NOTES FOR REFLECTIVE PAVEMENT MARKERS

1. The color of the raised pavement marker under both day and night conditions shall conform to the color of the marking for which they serve as a positioning guide, or for which they supplement or substitute.
2. To provide contrast on concrete pavement, or light asphalt, the five (5) white RPM's shall be followed by five black RPM's. The spacing between RPM's shall be 2'-6". Black RPM's will not be required for contrast with yellow RPM's.
3. RPM's used to supplement lane lines are to be paid for as Reflective Pavement Marker (Temporary), EA. RPM's used as a temporary substitute for paint or removable tape due to weather restrictions are to be paid for as Reflective Pavement Marker (Temporary), EA. RPM's used as a temporary substitute for paint or removable tape due to equipment malfunction are to be placed at the Contractor's expense.

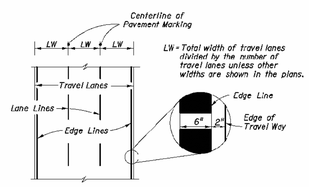

PLACEMENT OF PAVEMENT MARKINGS

2008 FDOT Design Standards

GENERAL INFORMATION FOR TRAFFIC CONTROL THROUGH WORK ZONES

Last Revision	Sheet No.
07/01/07	12 of 12
Index No.	
600	

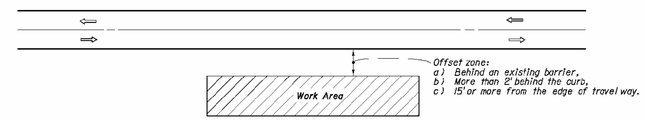

GENERAL NOTES

1. If the work operation (excluding establishing and terminating the work area) requires that two or more work vehicles cross the offset zone in any one hour, traffic control will be in conformance with Index No. 602.
2. No special signing is required.
3. When a side road intersects the highway within the work area, additional TTC devices shall be placed in accordance with other applicable TCZ indexes.
4. When construction activities encroach on a sidewalk refer to Index No. 660.
5. For general TCZ requirements and additional information, refer to Index No. 600.

SYMBOLS

Work Area

Lane identification + Direction of Traffic

CONDITIONS

WHERE ANY VEHICLE, EQUIPMENT, WORKERS AND THEIR ACTIVITIES ARE BEHIND AN EXISTING BARRIER, MORE THAN 2' BEHIND THE CURB, OR 15' OR MORE FROM THE EDGE OF TRAVEL WAY.

2008 FDOT Design Standards

TWO-LANE TWO-WAY, WORK OUTSIDE SHOULDER

Last Revision	Sheet No.
07/01/05	1 of 1
Index No.	
601	

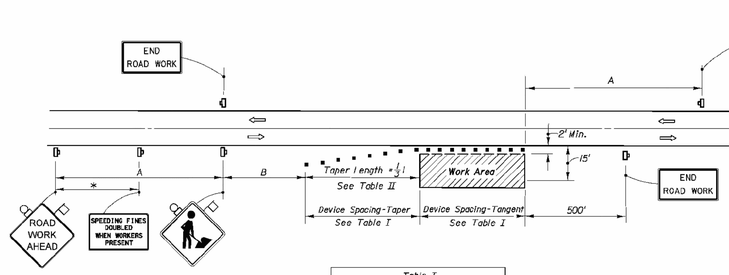

DISTANCE BETWEEN SIGNS		
Speed	Spacing (ft.)	
	A	B
40 mph or less	200	200
45 mph	350	350
50 mph or greater	500	500

* 500' beyond the ROAD WORK AHEAD sign or midway between signs whichever is less.

Table I Device Spacing				
Speed (mph)	Max. Distance Between Devices (ft.)			
	Cones or Tubular Markers		Type I or Type II Barricades or Vertical Panels or Drums	
	Taper	Tangent	Taper	Tangent
25	25	50	25	50
30 to 45	25	50	30	50
50 to 70	25	50	50	100

Table II Taper Length - Shoulder				
Speed (mph)	1/3 L (ft)			Notes
	8' Shldr.	10' Shldr.	12' Shldr.	
25	28	35	42	$L = \frac{WS^2}{60}$
30	40	50	60	
35	55	68	82	
40	72	90	107	
45	120	150	180	L = WS
50	133	167	200	
55	147	183	220	
60	160	200	240	
65	173	217	260	
70	187	233	280	

8' minimum shoulder width

1/3 L = Length of shoulder taper in feet

W = Width of total shoulder in feet (combined paved and unpaved width)

S = Posted speed limit (mph)

SYMBOLS

Work Area

Sign With 18" x 18" (Min.) Orange Flag And Type B Light

Channelizing Device (See Index No. 600)

Work Zone Sign

Lane Identification + Direction of Traffic

GENERAL NOTES

1. When four or more work vehicles enter the through traffic lanes in a one hour period or less (excluding establishing and terminating the work area), the advanced FLAGGER sign shall be substituted for the WORKERS sign. For location of flaggers and FLAGGER signs, see Index No. 603.
2. WORKERS sign to be removed or fully covered when no work is being performed.
3. SHOULDER WORK sign may be used as an alternate to the WORKERS sign only on the side where the shoulder work is being performed.
4. When a side road intersects the highway within the TTC zone, additional TTC devices shall be placed in accordance with other applicable TCZ Indexes.
5. For general TCZ requirements and additional information, refer to Index No. 600.

DURATION NOTES

1. Signs and channelizing devices may be omitted if all of the following conditions are met:
   a) Work operations are 60 minutes or less.
   b) Vehicles in the work area have high-intensity, rotating, flashing, oscillating, or strobe lights operating.

CONDITIONS

WHERE ANY VEHICLE, EQUIPMENT, WORKERS OR THEIR ACTIVITIES ENCROACH THE AREA CLOSER THAN 15' BUT NOT CLOSER THAN 2' TO THE EDGE OF TRAVEL WAY.

2008 FDOT Design Standards

TWO-LANE TWO-WAY, WORK ON SHOULDER

Last Revision	Sheet No.
07/01/07	1 of 1
Index No.	
602	

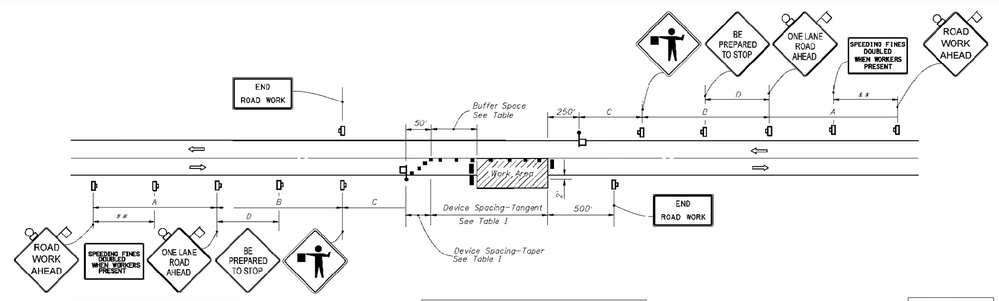

DISTANCE BETWEEN SIGNS				
Speed (mph)	Spacing (ft.)			
	A	B	C	D
40 or less	200	200	200	100
45	350	350	350	175
50	500	500	500	250
55 or greater	2640	1640	1000	500

* The ROAD WORK 1 MILE sign may be used as an alternate to the ROAD WORK AHEAD sign.

** 500' beyond the ROAD WORK AHEAD sign or midway between signs whichever is less.

*** BE PREPARED TO STOP sign may be omitted for speeds of 45 MPH or less.

TABLE I DEVICE SPACING				
Speed (mph)	Max. Distance Between Devices (ft.)			
	Cones or Tubular Markers		Type I or Type II Barricades or Vertical Panels or Drums	
	Taper	Tangent	Taper	Tangent
25 to 45	20	50	20	50
50 to 70	20	50	20	100

BUFFER SPACE	
Speed (mph)	Dist. (ft.)
25	155
30	200
35	250
40	305
45	360
50	425
55	495
60	570
65	645
70	730

When Buffer Space cannot be attained due to geometric constraints, the greatest attainable length shall be used, but not less than 200 ft.

SYMBOLS

Work Area

Sign With 18" x 18" (Min.) Orange Flag And Type B Light

Type I, Type II Or Type III Barricade Or Vertical Panel Or Drum

Channelizing Device (See Index No. 500)

Work Zone Sign

Flagger

Automated Flagger Assistance Devices (AFAD), With Gate

Lane Identification + Direction of Traffic

GENERAL NOTES

1. Work operations shall be confined to one traffic lane, leaving the opposite lane open to traffic.
2. Additional one way control may be effected by the following means:
   (1) Flag-carrying vehicle; (2) Official vehicle;
   (3) Pilot vehicles; (4) Traffic signals.

   When flaggers are the sole means of one-way control, the flaggers shall be in sight of each other or in direct communication at all times.
3. The ONE-LANE ROAD signs are to be fully covered and the FLAGGER signs either removed or fully covered when no work is being performed and the highway is open to two-way traffic.
4. When a side road intersects the highway within the TTC zone, additional TTC devices shall be placed in accordance with other applicable TCZ Indexes.
5. The two channelizing devices directly in front of the work area and the one channelizing device directly at the end of the work area may be omitted provided vehicles in the work area have high-intensity rotating, flashing, oscillating, or strobe lights operating.
6. For general TCZ requirements and additional information, refer to Index No. 600.

DURATION NOTES

1. ROAD WORK AHEAD and the BE PREPARED TO STOP signs may be omitted if all of the following conditions are met:
   a) Work operations are 60 minutes or less.
   b) Speed limit is 45 mph or less.
   c) No sight obstructions to vehicles approaching the work area for a distance equal to the buffer space.
   d) Vehicles in the work area have high-intensity, rotating, flashing, oscillating, or strobe lights operating.
   e) Volume and complexity of the roadway has been considered.

CONDITIONS

WHERE ANY VEHICLE, EQUIPMENT, WORKERS OR THEIR ACTIVITIES ENCROACH THE AREA BETWEEN THE CENTERLINE AND A LINE 2' OUTSIDE THE EDGE OF TRAVEL WAY.

2008 FDOT Design Standards

TWO-LANE TWO-WAY, WORK WITHIN THE TRAVEL WAY

Last Revision	Sheet No.
07/01/07	1 of 2
Index No.	
603	

NOTE:
INFORMATION ON THIS SHEET IS FROM FDOT REFERENCE DOCUMENTATION FOR USE ON PROJECTS WITHIN FDOT RIGHT-OF-WAY.

Date:

Thomas G. Walker, P.E.
Florida PE 31462

REVISIONS	DATE

DESIGNED BY:	NO.
LSA/TGW	
DRAWN BY:	
ABE	
DATE	
10/17/08	

PROJECT MANAGER: LAURA S. ANDREWS, PE
FILE NAME: LBK WTR C-707.DWG
ACCOUNT:

TGW ENGINEERING, INC.
FL COA# 26755
909 TAMIAMI TRAIL SOUTH, SUITE 210
NOKOMIS, FLORIDA 34275
PH:(941) 412-9197 FAX:(941) 412-9273

PARTNERSHIP

ENGINEERING VISIONS, INC.
FL COA# 27192
4400 E. CONQUISTADOR PKWY, SUITE 20
SARASOTA, FLORIDA 34234
PH:(941) 870-5822, FAX:(941) 870-5449

UPSIZE POTABLE WATER TRANSMISSION MAIN

TOWN OF LONGBOAT KEY, SARASOTA COUNTY, FLORIDA

FDOT DETAILS 600 PG 12 & 601, 602, 603 PG 1

DRWG. NO: C-707

SHT. 54 OF 55

DRAWING SIZE 24" x 36" - USE GRAPHIC SCALE OTHERWISE.