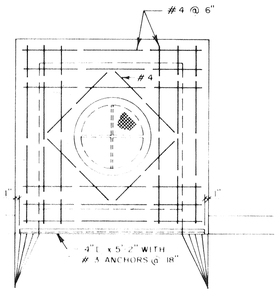

PLAN - COVER

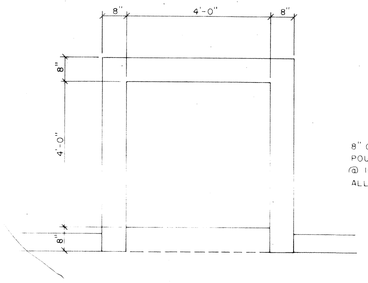

PLAN - COVER REMOVED

TYPICAL CURB INLET

SCALE: 1/2" = 1'-0"

NOTE: FOR LOCATIONS WHERE PIPE SIZES REQUIRE A LARGER BOX, SEE DETAIL (1) DWG. 191-670

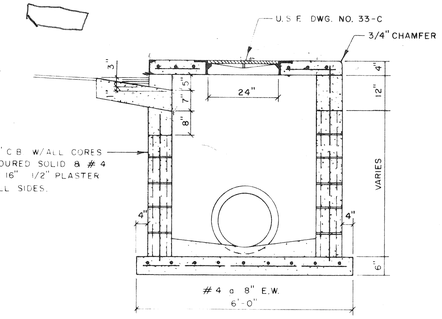

SECTION

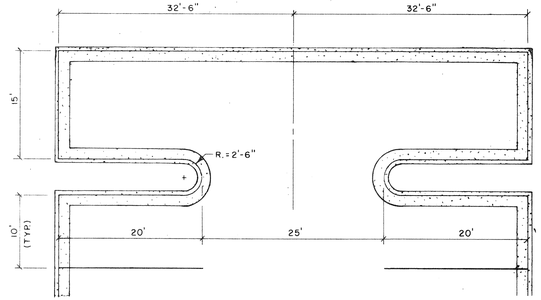

TURNAROUND DETAIL "A"

SCALE: 1" = 10'-0"

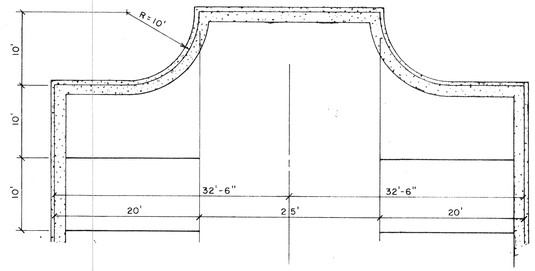

TURNAROUND DETAIL "B"

SCALE: 1" = 10'-0"

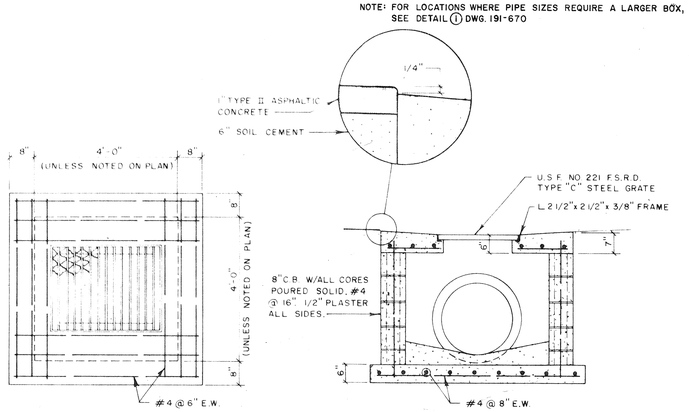

PLAN

SECTION

TYPICAL DROP INLET

SCALE: 1/2" = 1'-0"

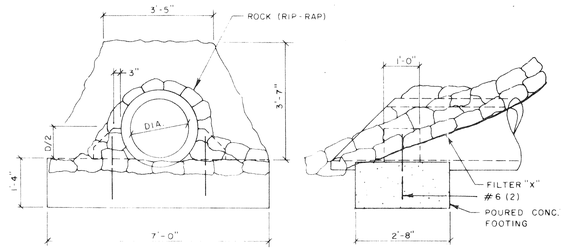

PLAN

SECTION

TYPICAL ENDWALL

SCALE: 1/2" = 1'-0"

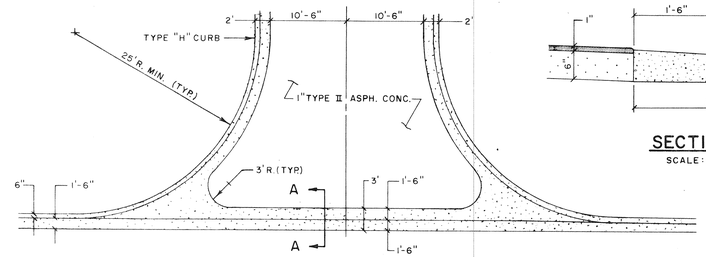

VALLEY GUTTER DETAIL

SCALE: 1" = 10'-0"

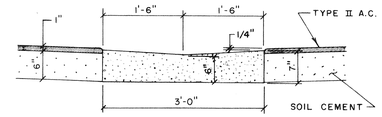

SECTION A-A

SCALE: 3/4" = 1'-0"

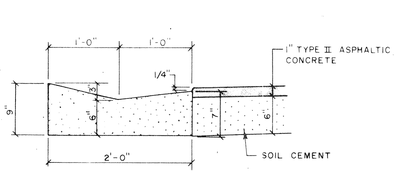

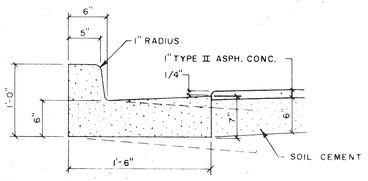

CURBS POURED WITH CONTINUOUS PAVING MACHINE SHALL HAVE JOINTS SAW CUT EVERY 10' FOLLOWING COMPLETION OF POUR. CONSTRUCTION JOINTS SHALL BE 10' O.C. AND 1/2" PREMOLDED EXP. JOINTS AT 40' O.C.

("MIAMI CURB") TYPE "K" CURB

SCALE: 1" = 1'-0"

TYPE "H" CURB

SCALE: 1" = 1'-0"

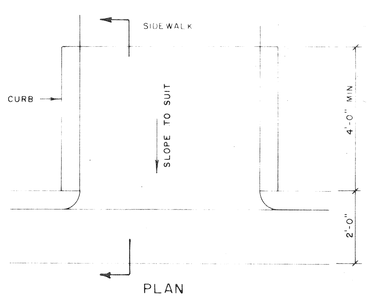

PLAN

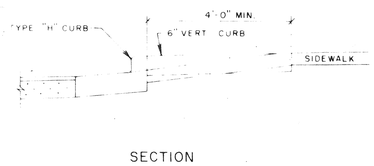

SECTION

BICYCLE RAMP DETAIL

SCALE: 1/2" = 1'-0"

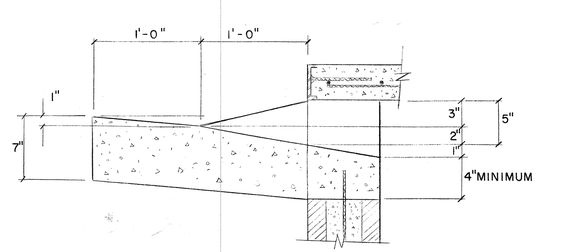

SECTION A-A

SCALE: 1-1/2" = 1'

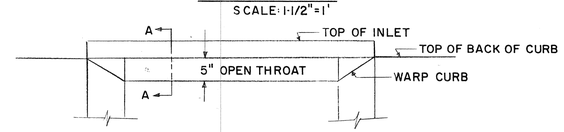

ELEVATION

SCALE: 3/4" = 1'

DETAIL OF CURB INLET FOR TYPE "K" CURB

SCALE: AS SHOWN

NOTE: ALL OTHER DETAILS ARE THE SAME AS FOR TYPICAL CURB INLET ON THIS SHEET.

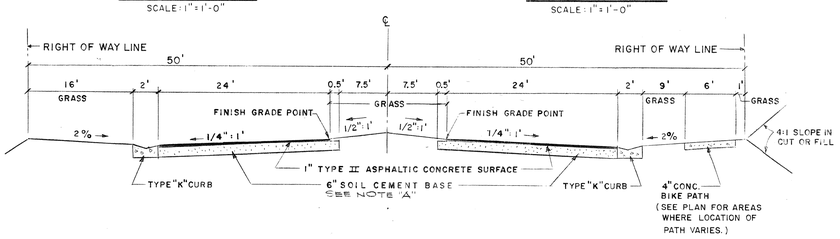

TYPICAL SECTION HARBOURSIDE DRIVE

NOT TO SCALE

NOTE: SEE THE PLAN VIEW ON THE PLAN AND PROFILE SHEETS FOR DEPARTURES FROM THIS TYPICAL SECTION.

NOTE "A" A 6" COMPACTED SHELL BASE IS AN ALTERNATIVE AT THE OWNER'S OPTION

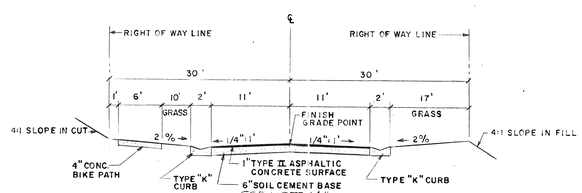

NOTE "A" A 6" COMPACTED SHELL BASE IS AN ALTERNATIVE AT THE OWNER'S OPTION

TYPICAL SECTION FAIR OAKS LANE

NOT TO SCALE

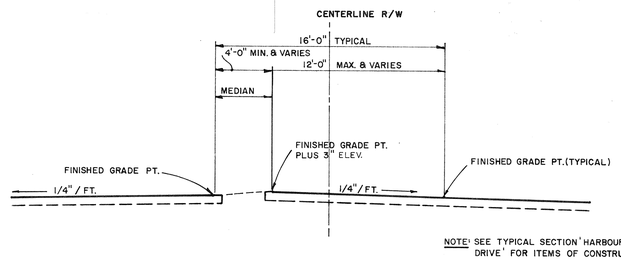

NOTE: SEE TYPICAL SECTION "HARBOURSIDE DRIVE" FOR ITEMS OF CONSTRUCTION.

TYPICAL SECTION AT LEFT TURN LANE

NO SCALE

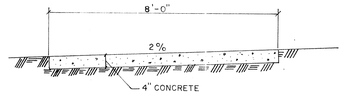

TYPICAL SECTION OF BIKE PATH

NOT TO SCALE

BENNETT & BISHOP
CONSULTING ENGINEERS & SURVEYORS
SARASOTA FLORIDA

APPROVED BY

REVISED			
DATE	DESCRIPTION	BY	

DATE	FEB 5, 68
SCALE	AS SHOWN
DESIGN	
DRAWN	R.A.B.
CHECK	
APPROVED	

ARVIDA CORPORATION
HARBOURSIDE DRIVE and FAIR OAKS LANE
LONGBOAT KEY SARASOTA, FLORIDA

PAVING & DRAINAGE DETAILS

DWRG. NO.
191-669