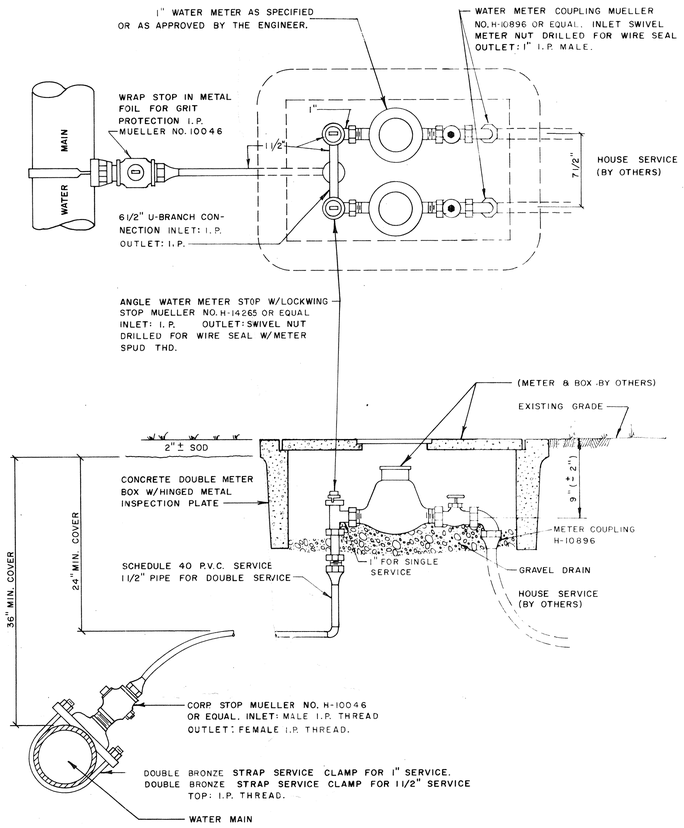

TYPICAL METERED SERVICE DETAILS

NO SCALE

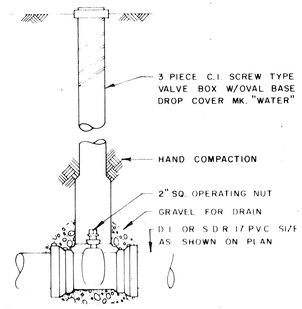

VALVE DETAIL

NO SCALE

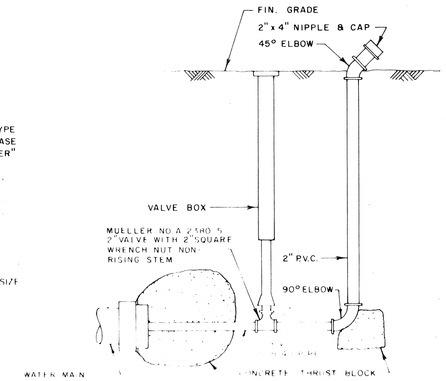

TYPICAL BLOWOFF DETAIL

NO SCALE

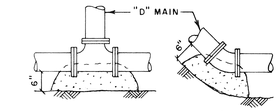

AREAS DETERMINED BY CONC. CONTACT WITH UNDISTURBED MATERIAL

THRUST BLOCK AREAS IN SQ. FT.				
SIZE	TEE	90° BEND	45° BEND	22 1/2° BEND
4"	1.5	2.0	1.0	1.0
6"	4.0	5.5	3.0	1.5
8"	7.0	10.0	5.0	3.0
10"	10.0	14.0	7.0	5.0

WATER MAIN THRUST BLOCKS

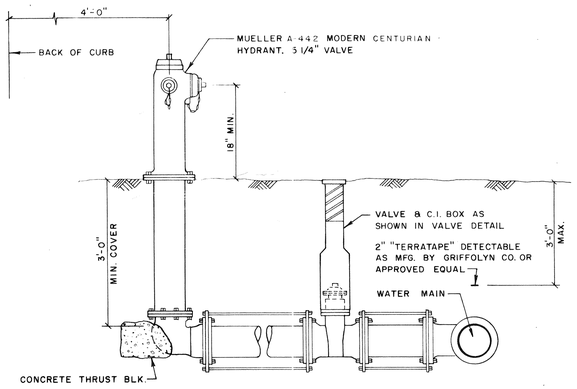

TYPICAL FIRE HYDRANT DETAIL

NO SCALE

BENNETT & BISHOP
CONSULTING ENGINEERS & SURVEYORS
SARASOTA FLORIDA

APPROVED BY

REVISED		
DATE	DESCRIPTION	BY

DATE	Feb 5, 1982
SCALE	AS SHOWN
DESIGN	R.A.B.
DRAWN	
CHECK	
APPROVED	

ARVIDA CORPORATION
HARBOURSIDE DRIVE and FAIR OAKS LANE
LONGBOAT KEY SARASOTA, FLORIDA

WATER SUPPLY DETAILS

DRWG. NO.
191-668