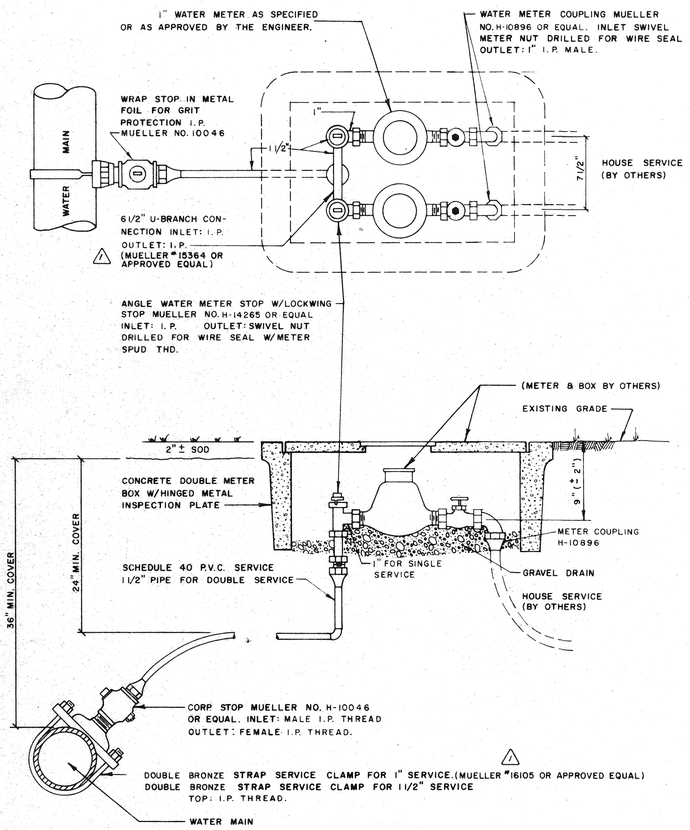

TYPICAL METERED SERVICE DETAILS

NO SCALE

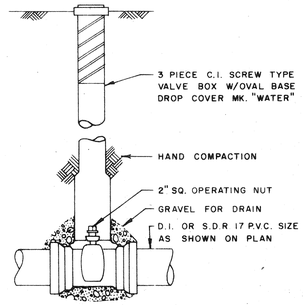

VALVE DETAIL

NO SCALE

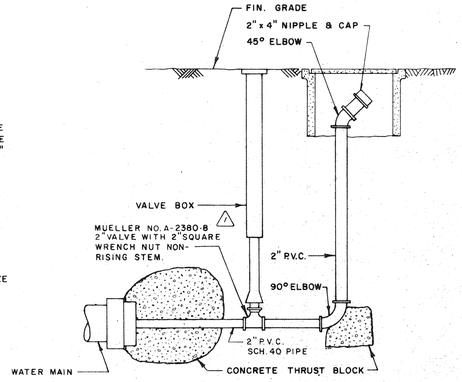

TYPICAL BLOWOFF DETAIL

NO SCALE

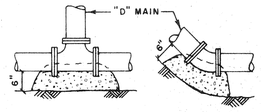

AREAS DETERMINED BY CONC. CONTACT WITH UNDISTURBED MATERIAL

THRUST BLOCK AREAS IN SQ. FT.				
SIZE	TEE	90° BEND	45° BEND	22 1/2° BEND
4"	1.5	2.0	1.0	1.0
6"	4.0	5.5	3.0	1.5
8"	7.0	10.0	5.0	3.0
10"	10.0	14.0	7.0	5.0

WATER MAIN THRUST BLOCKS

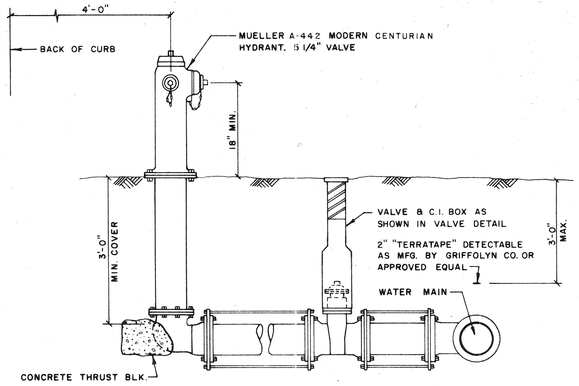

TYPICAL FIRE HYDRANT DETAIL

NO SCALE

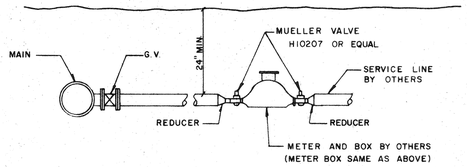

TYPICAL SERVICE DETAIL

NO SCALE

NOTE:

1. ALL P.V.C. WATER MAIN SHALL BE COLOR CODED BLUE WITH CLASSIFICATION SDR-17, WITH 36" COVER AND DETECTABLE TAPE.

BENDING RADIUS

PIPE SIZE	OUTSIDE DIAMETER	SDR/CLASS	MINIMUM RADIUS
4" PVC	4.80"	18/150	120 Ft.
6" PVC	6.90"	18/150	173 Ft.
8" PVC	9.50"	18/150	238 Ft.
10" PVC	11.10"	18/150	278 Ft.
12" PVC	13.20"	18/150	330 Ft.

BENNETT & BISHOP
CONSULTING ENGINEERS & SURVEYORS
SARASOTA FLORIDA

REVISED	DATE	DESCRIPTION	BY
	Jan 8 '85	General Revisions	RC

APPROVED BY

DATE	SEPT 21, 1982
SCALE	AS SHOWN
DESIGN	
DRAWN	R.A.B.
CHECK	
APPROVED	

ARVIDA CORPORATION
TOWN PLAZA - PHASE II
LONGBOAT KEY SARASOTA, FL.

WATER SUPPLY DETAILS

DRWG. NO. 657