AF 18867AB

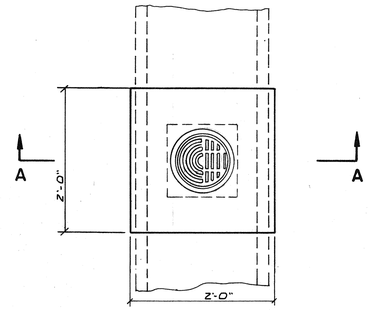

PLAN

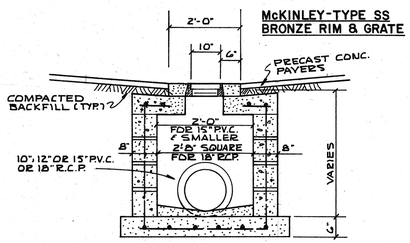

ALTERNATE SECTION A-A
FOR CHANGE IN DIRECTION

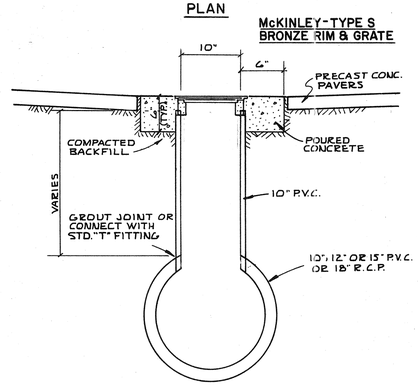

SECTION A-A

PEDESTRIAN AREA DRAIN
N.T.S.

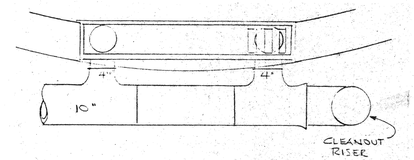

PLANTER WALL DRAIN
N.T.S.

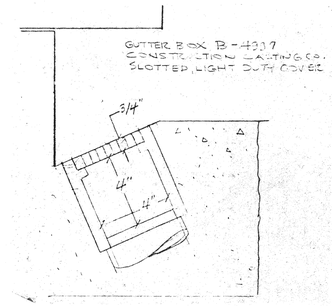

SECTION AT GUTTER BOX
N.T.S.

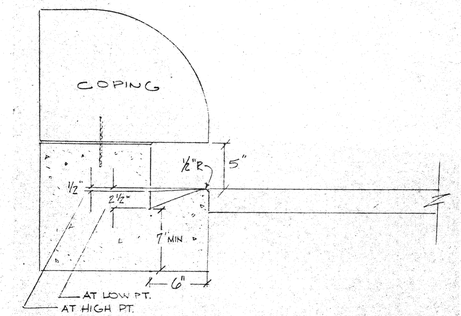

GUTTER SECTION
N.T.S.

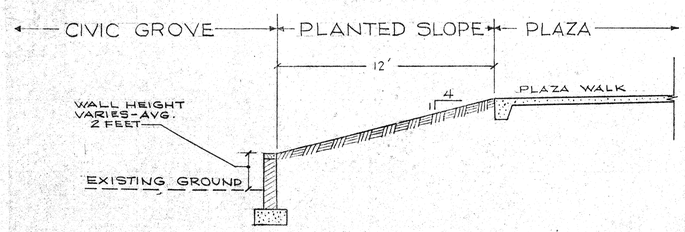

TYPICAL SECTION A-A
SCALE: 1/4"=1'-0"
SEE DRAWING NO. 191-649 FOR LOCATION

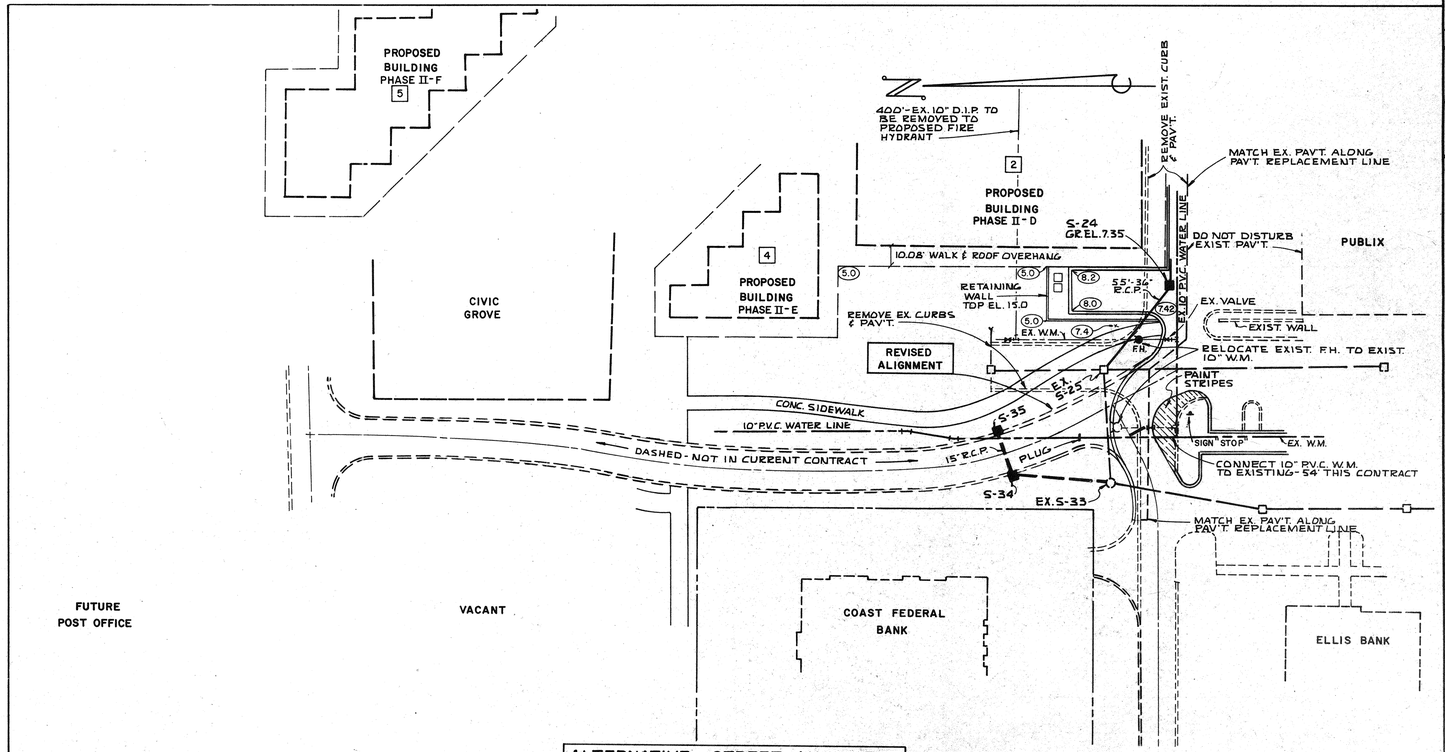

ALTERNATIVE STREET ALIGNMENT
SCALE: 1"=40'

NOTE: THIS ALTERNATIVE ALIGNMENT WILL BE USED, IF APPROVED BY THE TOWN, IN LIEU OF THE LAYOUT SHOWN ON DWG. 191-649

BENNETT & BISHOP
CONSULTING ENGINEERS & SURVEYORS SARASOTA FLORIDA

APPROVED BY: William R. Bishop Reg # 1089

REVISED	DATE:	DESCRIPTION:	BY
	3-19-84	GENERAL REVISIONS, ADD'L. NOTES	L.G.

DATE	NOV 24, 1982
SCALE	AS SHOWN
DESIGN	M.K.
DRAWN	R.R.F.
CHECK	
APPROVED	

ARVIDA CORPORATION
TOWN PLAZA – PHASE II

STREET ALIGNMENT AND MISCELLANEOUS DETAILS

DWRG. No. 191-