NOTES

1. JUNCTION BOX FRAME AND LID, TYPE "D", SEE DETAIL
2. DROP INLET WITH ANGLE FRAME AND FLAT STEEL GRATE, SIMILAR TO F.D.O.T. INDEX 233,
3. BOX DIMENSIONS AS PER CURB INLET DIMENSIONS SCHEDULE

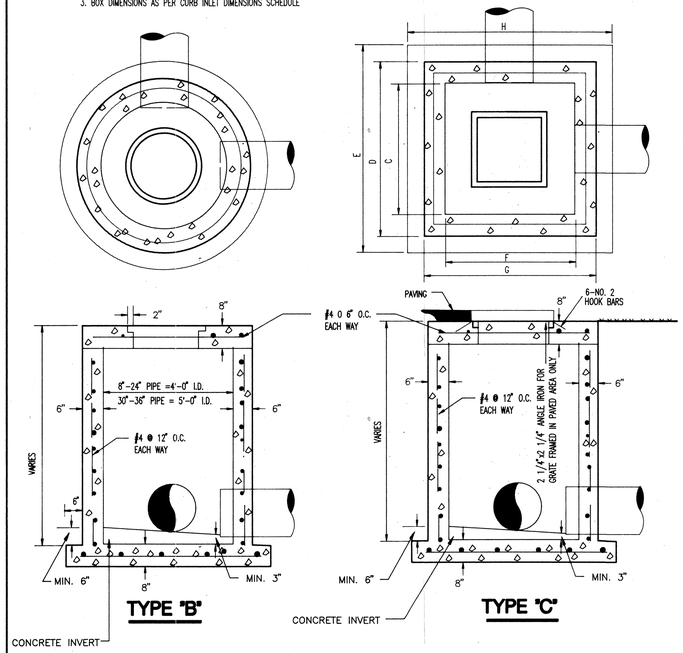

JUNCTION BOX/DROP INLET

N.T.S.

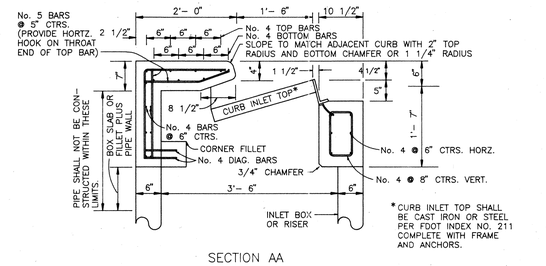

SECTION AA

TOP AND FLOOR SLAB TABLE – TYPE J					
WIDTH	MAX. LENGTH	BOX SLAB THICKNESS	ALLOWABLE FILL OVER TOP SLAB MIN.	ALLOWABLE FILL OVER TOP SLAB MAX.	REINFORCING TOP & FLOOR SLABS
3'-6"	6'-0"	8"	2'	29'	#6 @ 6" CTRS. B.W.
4'-0"	6'-0"	8"	2'	25'	#6 @ 6" CTRS. B.W.
5'-0"	6'-0"	10"	2'	27'	#7 @ 6" CTRS. B.W.
5'-0"	6'-0"	8"	2'	20'	#6 @ 6" CTRS. B.W.
6'-0"	6'-0"	10"	2'	25'	#7 @ 6" CTRS. B.W.
6'-0"	6'-0"	10"	2'	11'	#7 @ 6" CTRS. B.W.
5'-0"| 6'-0" 7'-0"	7'-0"	10"	2'	25'	#7 @ 4-1/2" CTRS. B.W.
5'-0" 5'-0" 7'-0" 8'-0"	8'-0"	10"	2'	15'	#7 @ 4-1/2" CTRS. B.W.
LARGER BOXES REQUIRE SPECIAL DESIGN DETAILS					

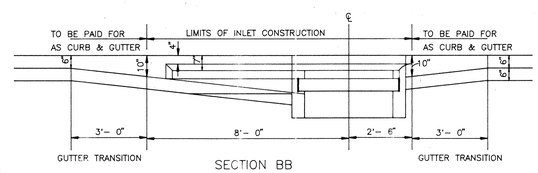

SECTION BB

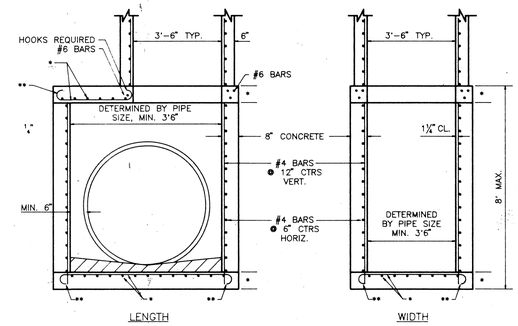

* SEE SLAB TABLE

** PERIPHERAL BARS OR STRAIGHT END EMBEDMENTS MAY BE USED IN LIEU OF STANDARD HOOKS, IN ACCORDANCE WITH FDOT DETAILS INDEX #201, SH. 3 OF 5.

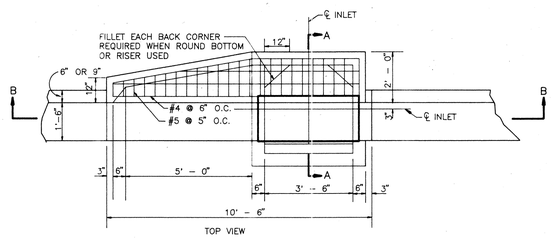

INLET TYPE 5

TYPE "B" CURB INLET

N.T.S.

F.D.O.T. INDEX 211, TYPE 5

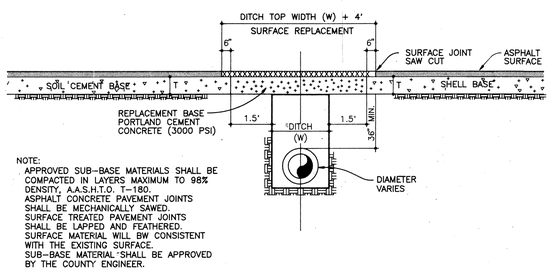

NOTE:
APPROVED SUB-BASE MATERIALS SHALL BE COMPACTED IN LAYERS MAXIMUM TO 98% DENSITY, A.A.S.H.T.O. T-180.
ASPHALT CONCRETE PAVEMENT JOINTS SHALL BE MECHANICALLY SAWED.
SURFACE TREATED PAVEMENT JOINTS SHALL BE LAPPED AND FEATHERED.
SURFACE MATERIAL WILL BW CONSISTENT WITH THE EXISTING SURFACE.
SUB-BASE MATERIAL SHALL BE APPROVED BY THE COUNTY ENGINEER.

CONCRETE AND FLEXIBLE PAVEMENT REPLACEMENT

N.T.S.

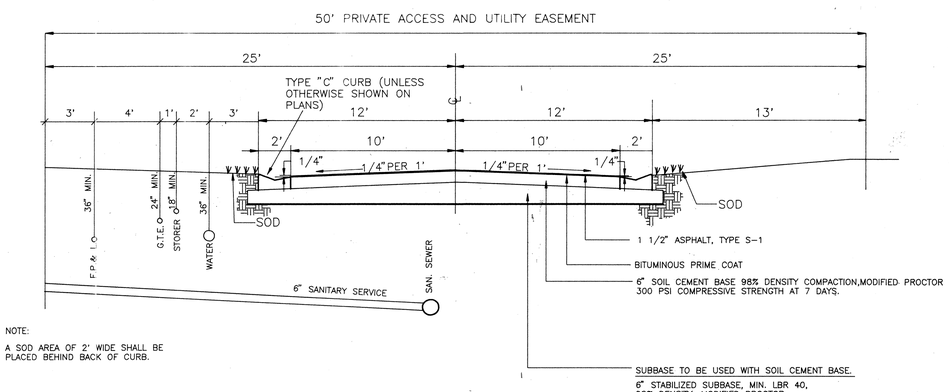

NOTE:
A SOD AREA OF 2' WIDE SHALL BE PLACED BEHIND BACK OF CURB.

TYPICAL PAVEMENT SECTION

50' PRIVATE ACCESS AND UTILITY EASEMENT

N.T.S.

MINDER & RHODES ENGINEERING CORPORATION

Engineers – Planners – Surveyors

3900 CLARK ROAD
SARASOTA, FL. 34233
(813) 922-7946

APPROVED
P.E. No. 32472
Date 7-30-92
No. S1088
CAD DWG. S1088GD1

Designed	WBH	Checked	Approved
Drawn	DBH	Scale N/A	Date 07/30/92

REVISIONS

No.	Date	Descriptions	By

WESTON POINTE
LONGBOAT KEY

SARASOTA COUNTY, FLORIDA

GRADING, PAVING & DRAINAGE DETAILS

SHEET
10