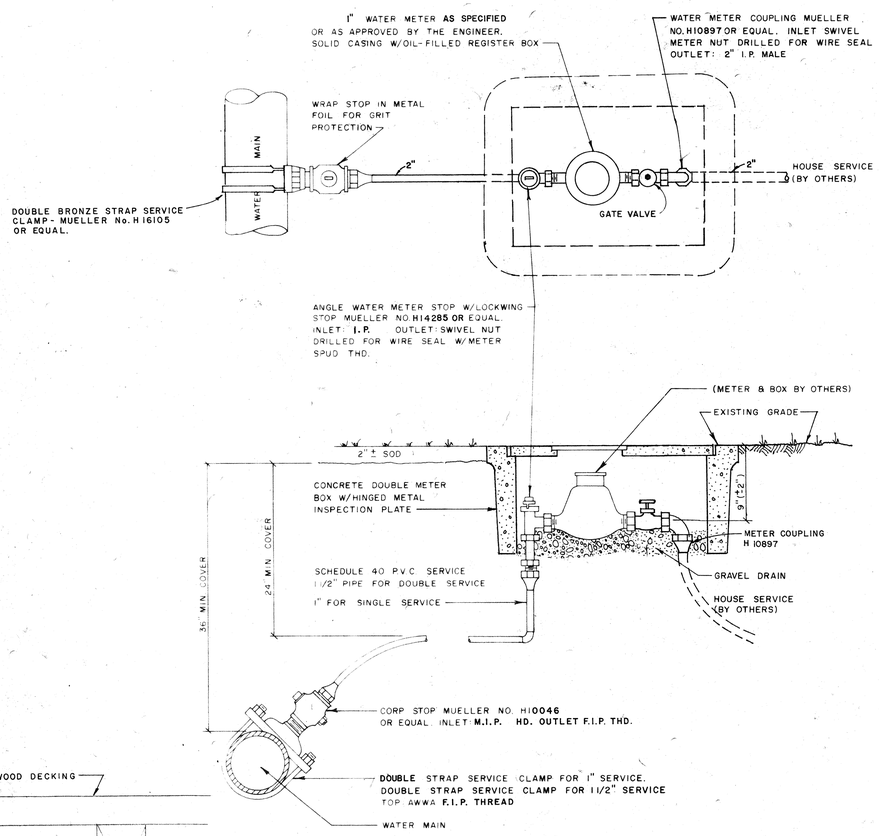

TYPICAL METERED SERVICE DETAILS

NO SCALE

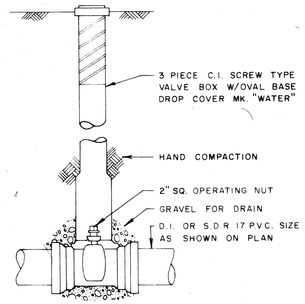

VALVE DETAIL

NO SCALE

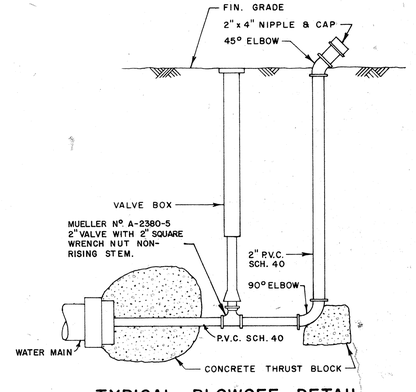

TYPICAL BLOWOFF DETAIL

NO SCALE

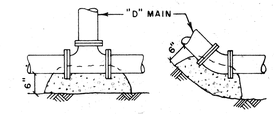

AREAS DETERMINED BY CONC. CONTACT WITH UNDISTURBED MATERIAL

THRUST BLOCK AREAS IN SQ. FT.				
SIZE	TEE	90° BEND	45° BEND	22 1/2° BEND
4"	1.5	2.0	1.0	1.0
6"	4.0	5.5	3.0	1.5
8"	7.0	10.0	5.0	3.0
10"	10.0	14.0	7.0	5.0

WATER MAIN THRUST BLOCKS

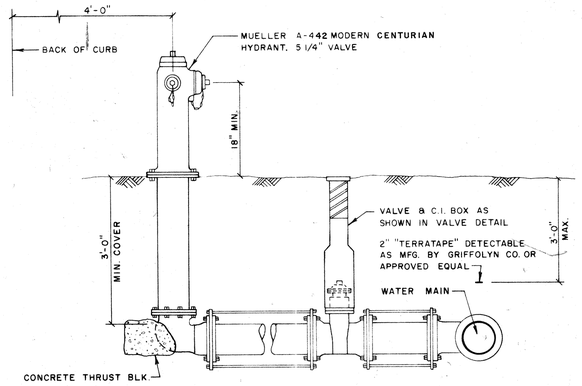

TYPICAL FIRE HYDRANT DETAIL

NO SCALE

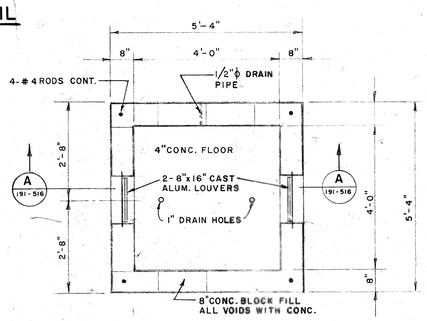

PLAN

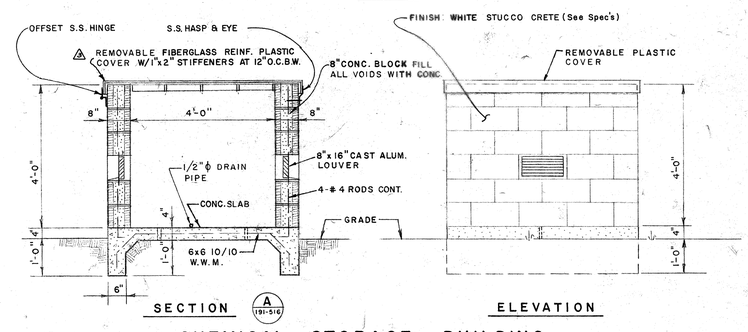

SECTION A 191-516 ELEVATION

CHEMICAL STORAGE BUILDING

SCALE 1/2" = 1'-0"

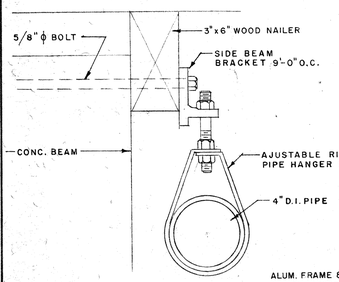

PIPE HANGER DETAIL

SCALE 3" = 1'-0"

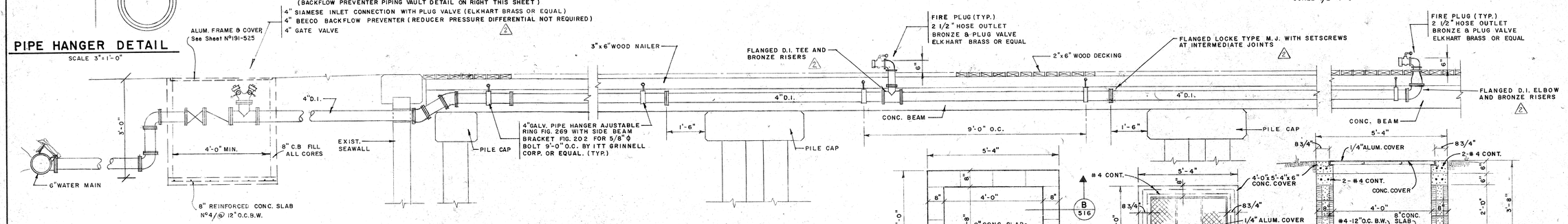

FIRE LINE DETAIL (TYP.)

SCALE 1/2" = 1'-0"

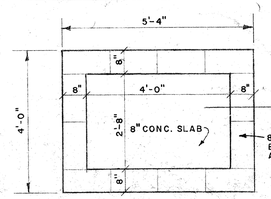

VAULT PLAN SCALE 1/2" = 1'-0"

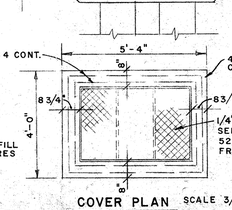

COVER PLAN SCALE 3/8" = 1'-0"

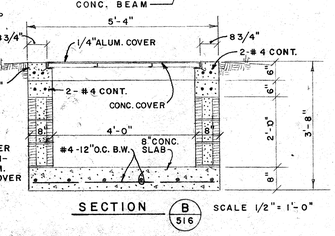

SECTION B 516 SCALE 1/2" = 1'-0"

⚠ BACKFLOW PREVENTER PIPING VAULT DETAIL

BENNETT & BISHOP
CONSULTING ENGINEERS & SURVEYORS SARASOTA FLORIDA

REVISED			
7-2-82	Rev. Bldg. Stub Blds. Roof	N.A.L.	PV
12-8-82	Added Piping Notes	N.A.L.	
12-24-82	Added Piping Vault Detail	N.A.L.	
DATE	DESCRIPTION	BY	

DATE	JAN. 11, 82		
SCALE	AS SHOWN		
DESIGN	W.F.B.		
DRAWN	R.A.B.		
CHECK			
APPROVED			

APPROVED BY

ARVIDA CORPORATION
BAY ISLES - HARBOUR MOORINGS
LONGBOAT KEY SARASOTA, FLORIDA

WATER SUPPLY DETAILS

DRWG. NO. 191-516