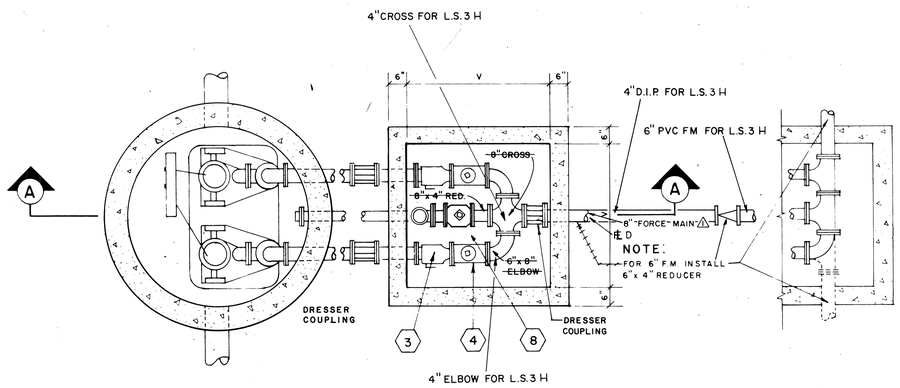

PLAN

AUXILIARY PLAN
LEFT OR RIGHT
DISCHARGE

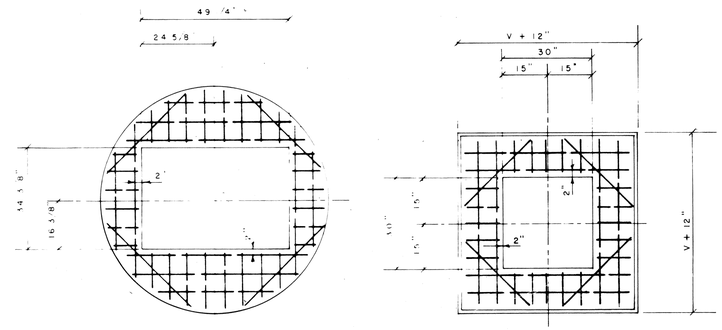

STEEL PLACEMENT IN COVERS

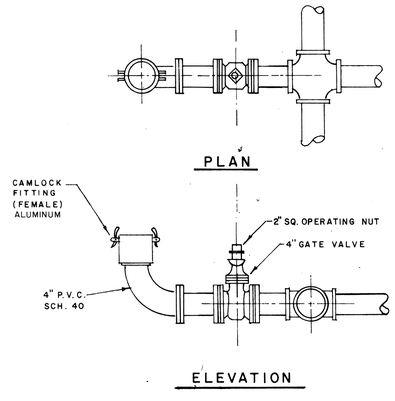

AUXILIARY PUMP DETAIL

⚠ NOTE LANDSCAPING TO BE COMPLETED BY OTHERS

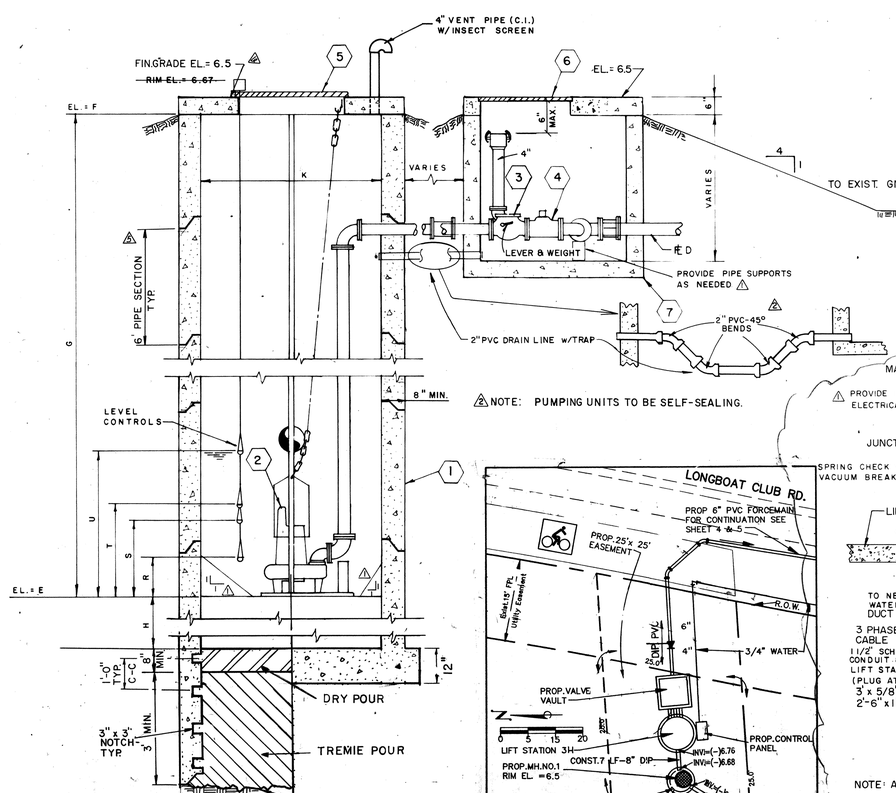

⚠ NOTE: PUMPING UNITS TO BE SELF-SEALING.

NOTE
TREMIE: CONTRACTOR TO SUBMIT QUALIFICATION & CONSTRUCTION TECHNIQUES PER SPECS. ENGINEER TO BE PRESENT DURING POUR.

SECTION "A - A"

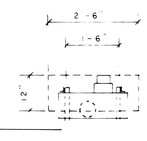

PLAN

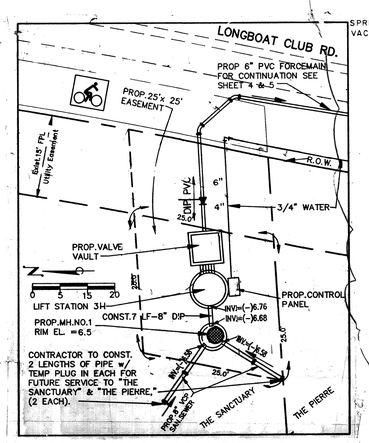

LIFT STATION 3H SITE DETAIL

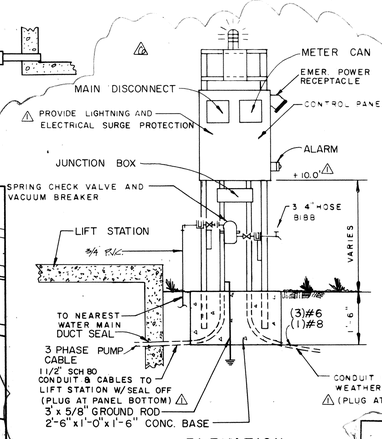

ELEVATION

CONTROL PANEL

NOTE: ALL WIRING (3) #6, (2) #8 AND THREE PHASE

NOTES:

1. ELECTRICAL SERVICE TO METER PAN BY OTHERS
2. SERVICE FROM METER PAN TO LIFT STATION (INCLUDING PANEL) BY CONTRACTOR
3. METER PAN SHALL BE LOCATED ON REAR OF CONTROL PANEL.
4. ALL BARREL JOINTS SHALL BE MADE WATERTIGHT WITH AN APPROVED NEOPRENE GASKET AND GROUT.
5. ⚠ ALL FLOAT CONNECTIONS SHALL BE EXTERIOR.

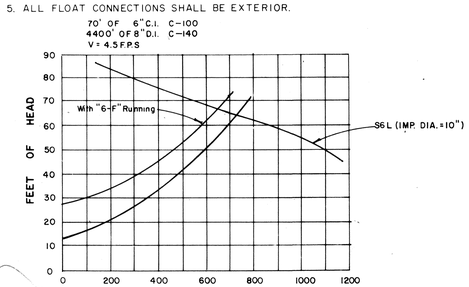

L.S.-7-F

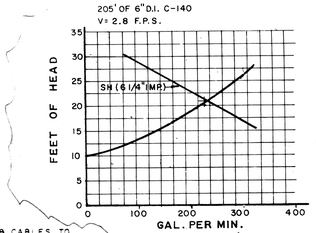

L.S.-8-F ⚠

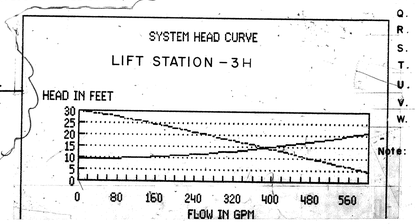

⬡ MATERIAL SCHEDULE (See Note Below)

ITEM	DESCRIPTION
1.	PRECAST CONCRETE WET WELL NOTE: SHOP DRAWINGS REQUIRED.
2.	PUMPS, HYDR-O-MATIC, SEE SCHEDULE.
3.	CHECK VALVE 6" UNLESS OTHERWISE NOTED(4" FOR LS 3A)
4.	ECCENTRIC PLUG VALVE 6" UNLESS OTHERWISE NOTED(4" FOR L.S. 3A).
5.	ACCESS HATCH COVER, 4'-0" x 2'-6" OPENING, HYDRO-O-MATIC.
6.	ACCESS HATCH COVER, 2'-6" x 2'-6" OPENING, ALUMINUM WITH S.S. FASTENINGS. W/ HASP ⚠
7.	PRECAST CONCRETE VALVE VAULT NOTE SHOP DRAWINGS REQUIRED.
8.	AUXILIARY PUMP CONNECTION, SEE DETAIL.
9.	BRACKET FOR FLOAT WIRES, LIFTING RINGS, NUTS AND WASHERS TO BE STAINLESS STEEL.
10.	CONTROL PANEL TO HAVE GENERATOR RECEPTACLE FOR EMERGENCY POWER. (RS JR58L044 L23 ⚠ 3AMP)
11.	SHOP DRAWINGS TO BE APPROVED BY THE TOWN OF LONGBOAT KEY.

SCHEDULE OF LIFT STATION DATA

LIFT STATION No.	L.B.K.CLUB 3 H	7-F	BAY ISLES UNIT No. 6 8-F ⚠
A. TYPE	HYDR-O-MATIC	HYDR-O-MATIC	HYDR-O-MATIC
B. INF. PIPE SIZE	8"	12"	10"
C. FL. LINE IN	-6.76	-8.59 ⚠	-5.0
D. FL. LINE OUT FM	1.0	2.0	1.0
E. LS BOTT. ELEV.	-12.29	-14.00	-10.00
F. ~~GRADE~~ ELEVATION	6.00	6.00	6.00
G. DEPTH TO BOTT.	18.29'	20.0'	16.0
H. DEPTH OF BALLAST	4"	2.0'	2.0
J. CY BALLAST	0.35	5.8	3.8
K. BARREL DIA. FT.	6'	10'Q'	8.0
L. PUMP MODEL	S4N	S6L	SH
M. H.P.	3	20	2
N. R.P.M.	1750 RPM	1750	1750 RPM
P. VOLT/PHASE	240/3	460/3	460/3
Q. FM SIZE	6"	8"	6"
R. OFF - BOTH PUMPS	18" (EL.-10.79)	1	12"
S. 1 PUMP ON ELEV.	-8.09	3'-6"	4'-0"
T. 2 PUMPS ON ELEV.	-7.59	4'-0"	4'-6"
U. H.W. ALARM ELEV.	-7.09	4'-6"	5'-0"
V. VALVE VAULT	6'-0"	6'-0"	6'-0"
W. DESIGN FLOW	386.7 GPM	688 G.P.M.	240 G.P.M.

Note: CHECK VALVE
ECCENTRIC PLUG VALVE

PROJECT ENGINEER
DESIGNED BY
PROJECT NO. PR23A-0001-AB
DATE: 12-1-89
CHECKED BY
SCALE: N/A
DRAWN BY N.J.A.C.
BY
REVISION
LTR.
DATE

TOWN OF LONGBOAT KEY, FLORIDA

LIFT STATION AS-BUILT FOR 3H

ENGINEER & LOCATION BISHOP & ASSOCIATES - 78 SARASOTA CENTER BLVD. SARASOTA, FLORIDA 34240 (813) 378-6362

T.L.K. FILE NO.

SHEET NUMBER 4 AB

REVISION

SANCTUARY