GRADE BEAM SCHEDULE

MARK	SIZE WIDTH×DEPTH	REINFORCING STEEL TOP	MID	BOTTOM	STIRRUPS	REMARKS
A	12 x 24	2#6	—	2#6	#3@10" oc	
B	16 x 24	2 LAYERS OF 2#6 EA.	—	2 LAYERS OF 2#6 EA.	#3@10" o.c.	
C	12 x 29	3#7	—	3#6	#3@10" oc	
D	30 x 29	3#7 +2#5	—	3#6 +2#5	#3@10" oc	SEE DETAIL "1/S-2"
E	30 x 29	4#6	—	4#6	#3@10" oc	

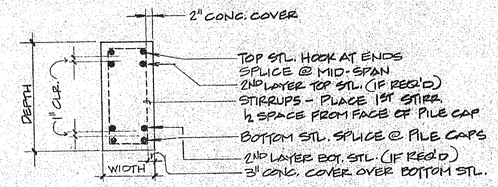

TYPICAL GRADE BEAM DETAIL

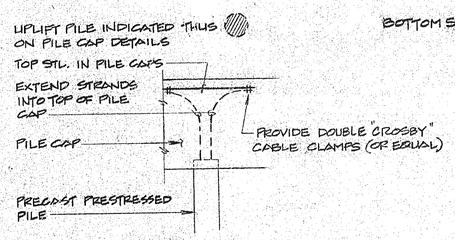

PRECAST PRESTRESSED UPLIFT PILE DETAIL "UP"

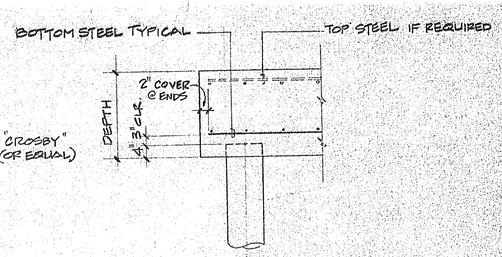

TYPICAL PILE CAP DETAIL

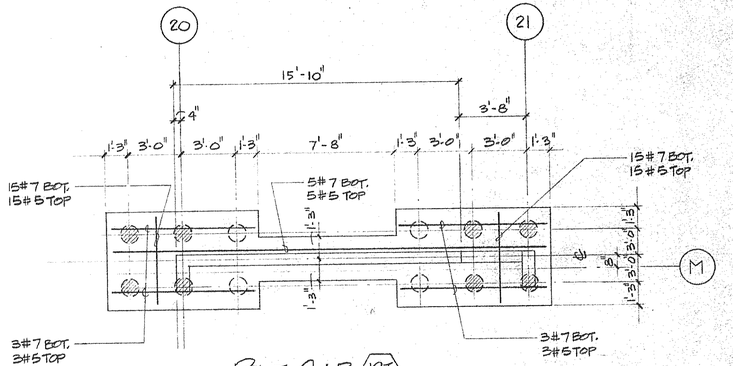

PILE CAP (12T)
4'-0" DEEP

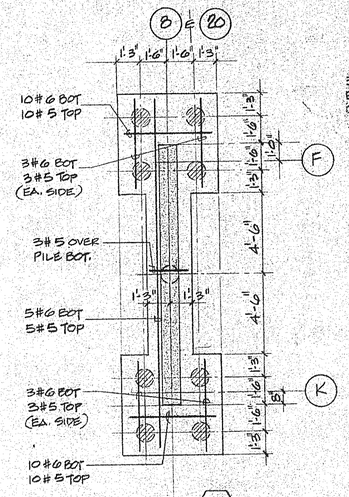

PILE CAP (9T)
2'-6" DEEP

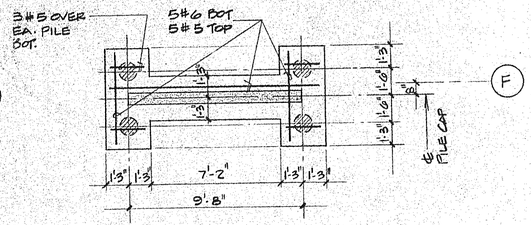

PILE CAP (4T)
2'-6" DEEP

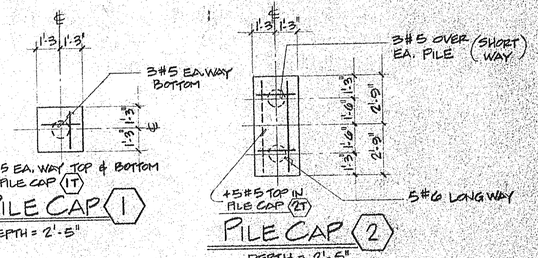

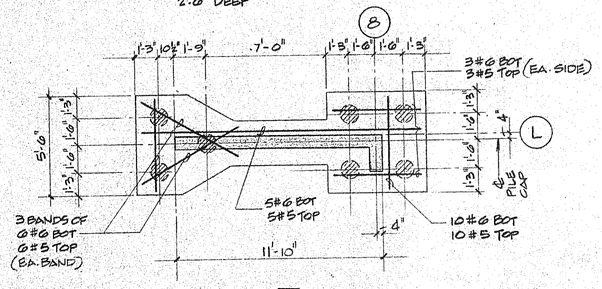

PILE CAP (7T)
2'-6" DEEP

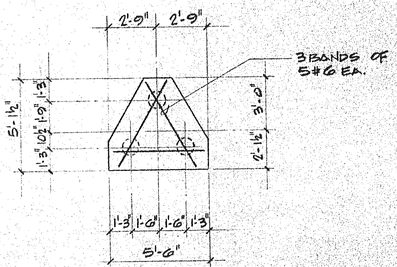

PILE CAP (3)
DEPTH = 2'-5"

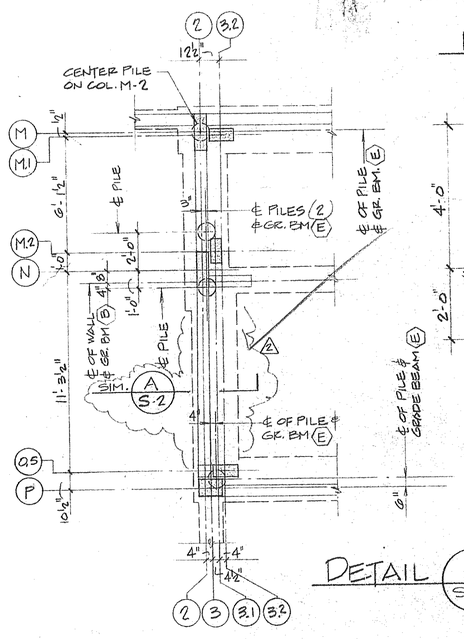

DETAIL (2 / S-2)
¼" = 1'-0"

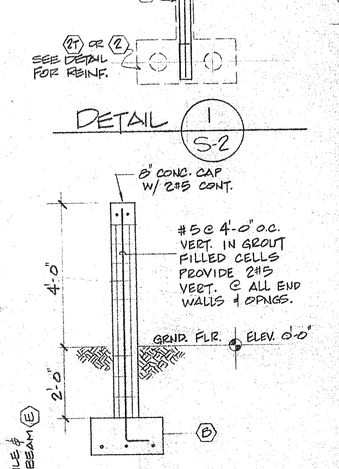

DETAIL (1 / S-2)

SECTION (3 / S-2)
½" = 1'-0"

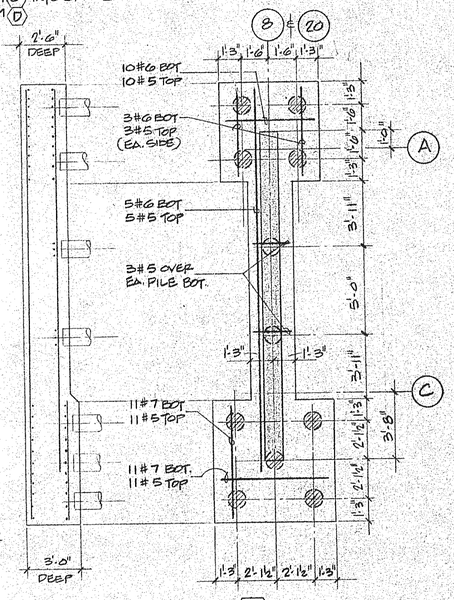

PILE CAP (11T)

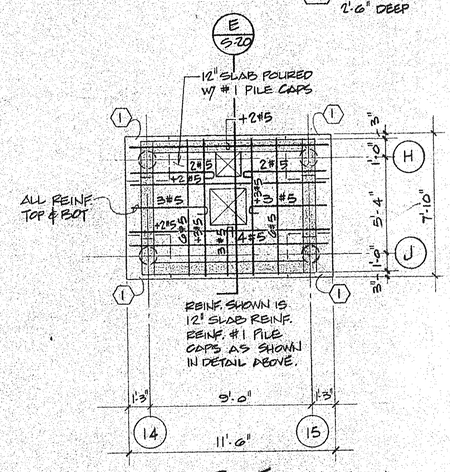

ELEVATOR PIT FOUNDATION DETAIL

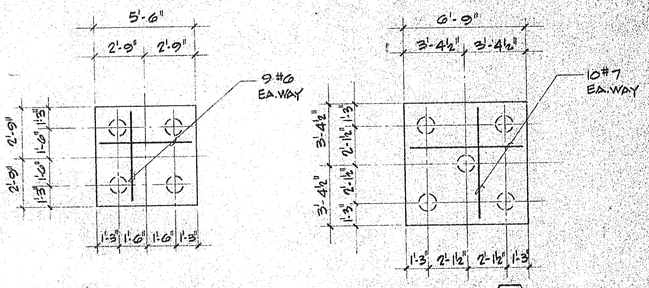

PILE CAP (4)
DEPTH = 2'-5"

PILE CAP (5)
DEPTH = 3'-5"

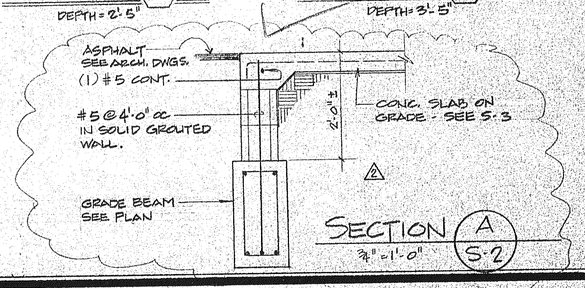

SECTION (A / S-2)
¾" = 1'-0"

SUNSET BEACH
SOUTHGATE BOATS KEY

1/4" = 1'-0" TYP. (EXCEPT AS NOTED)

BUILDING - 3
FOUNDATION DETAILS

ARNDA CORPORATION, STRUCTURAL ENGINEERS
BENNETT & BISHOP, INC. CONSULTING ENGINEERS & SURVEYORS
ARCHITECT & PLANNER
CLIBEL, WHITE & ASSOCIATES
BRANCH WALLS DESIGN CONCULTANTS ENGINEERING

ISSUED 1-16-84
REVISED 1-4-85
1-27-83

SHEET S-2 OF 24