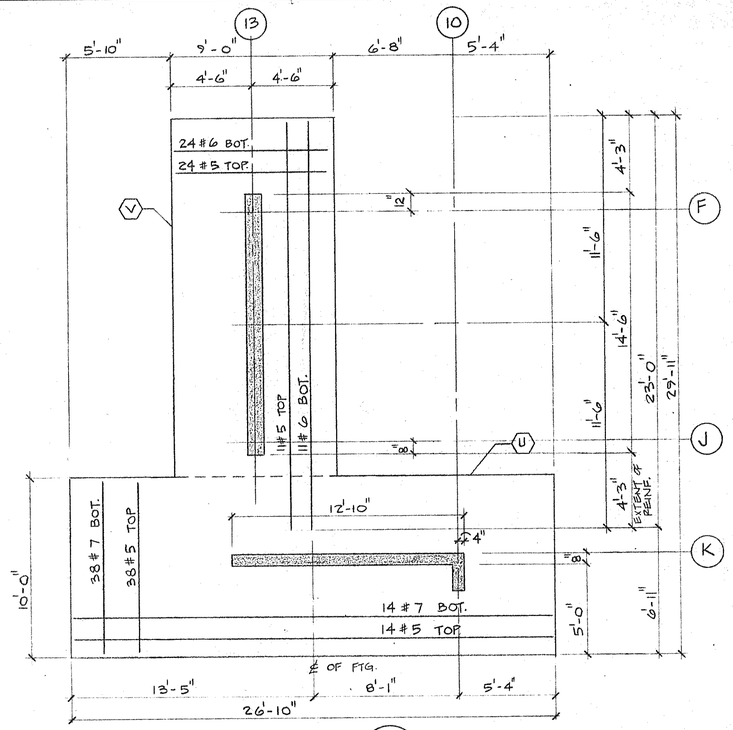

DETAIL 3/S-2
1/4"=1'-0"

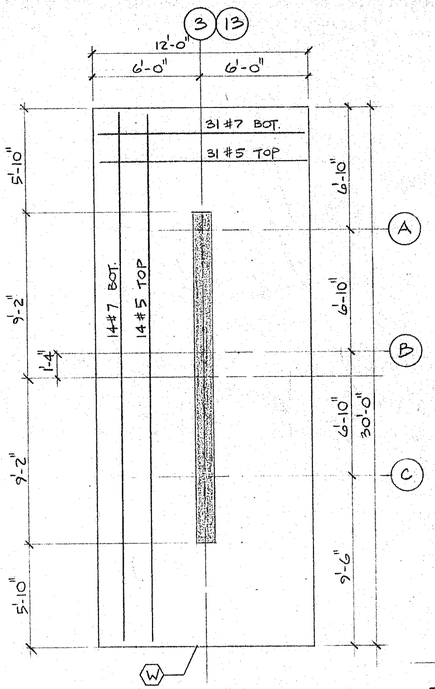

DETAIL 2/S-2
1/4"=1'-0"

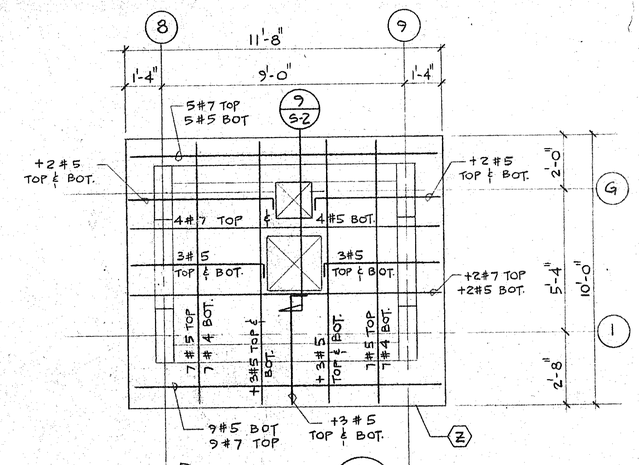

DETAIL 1/S-2
3/8"=1'-0"

FOOTING SCHEDULE

MARK	SIZE	DEPTH	REINFORCING
A	18" CONT.	12"	2#5 CONT. BOT.
B	24" CONT.	12"	3#5 CONT. BOT.
C	3'-6" ⊕	12"	4#5 E.W. BOT.
D	4'-0" ⊕	12"	4#5 E.W. BOT.
E	4'-6" ⊕	12"	5#5 E.W. BOT.
F	5'-0" ⊕	16"	6#5 E.W. BOT.
G	5'-6" ⊕	16"	7#5 E.W. BOT.
H	6'-0" ⊕	16"	7#6 E.W. BOT.
J	6'-6" ⊕	20"	7#6 E.W. BOT.
K	7'-6" ⊕	20"	8#6 E.W BOT.
L	8'-6" ⊕	24"	9#7 E.W. BOT.
M	9'-6" ⊕	28"	10#7 E.W. BOT.
N	10'-0" ⊕	28"	11#7 E.W. BOT.
P	10'-6" ⊕	28"	11#7 E.W. BOT.
Q	5'-0" × 14'-0"	24"	7#6 L.W. & 17#6 S.W. BOT. 7#6 L.W. & 17#5 S.W. TOP
R	6'-0" × 7'-6"	20"	9#6 L.W & 10#6 S.W. BOT.
S	5'-6" × 7'-8"	22"	8#6 L.W. & 9#6 S.W.
T	10'-0" × 28'-0"	28"	SEE DETAIL 4/S2
U	10'-0" × 26'-10"	28"	SEE DETAIL 3/S2
V	9'-0" × 23'-0"	24"	SEE DETAILS 3/S2 & 4/S2
W	12'-0" × 30'-0"	30"	SEE DETAIL 2/S2
X	10'-0" × 30'-0"	28"	13#7 L.W. & 31#7 S.W. BOT. 13#5 L.W. & 31#5 S.W. TOP
Z	11'-8" × 10'-0"	16"	SEE DETAIL 1/S2
Za	11'-6" × 3'-6"	12"	SEE DETAIL 5/S2
Zb	12'-9" × 4'-0"	12"	SEE DETAIL 6/S2

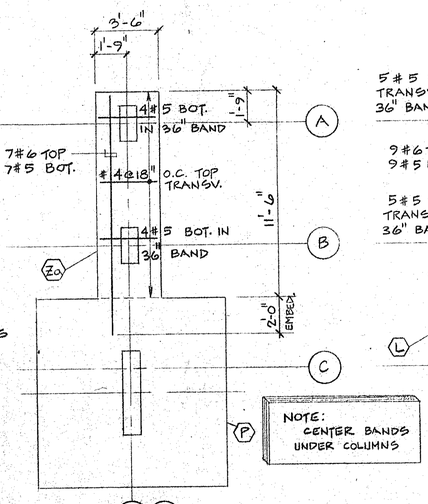

DETAIL 5/S-2
1/4"=1'-0"

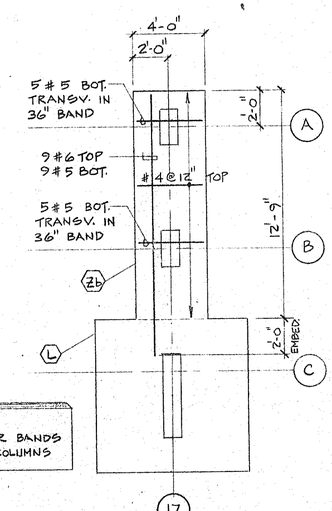

DETAIL 6/S-2
1/4"=1'-0"

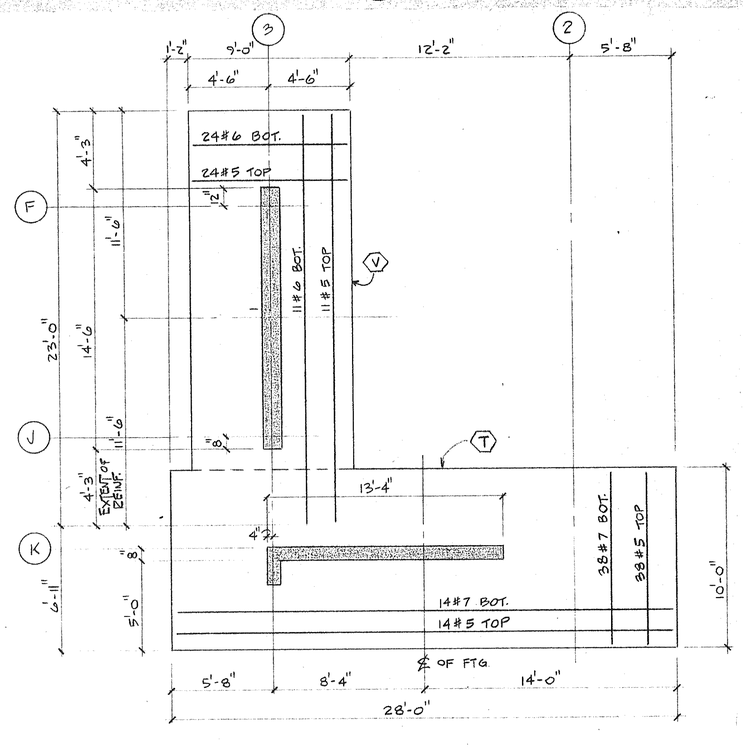

DETAIL 4/S-2
1/4"=1'-0"

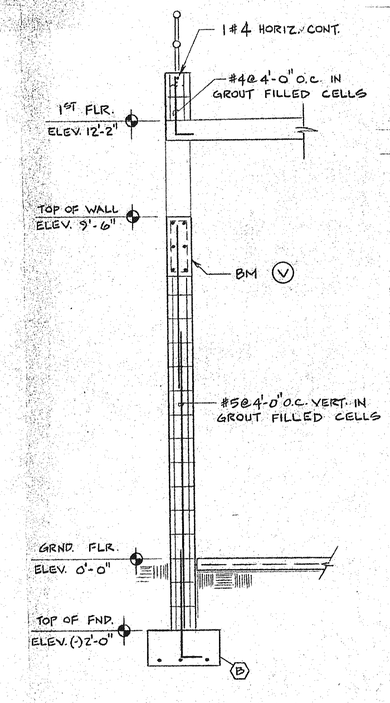

SECTION 10/S-2
1/2"=1'-0"

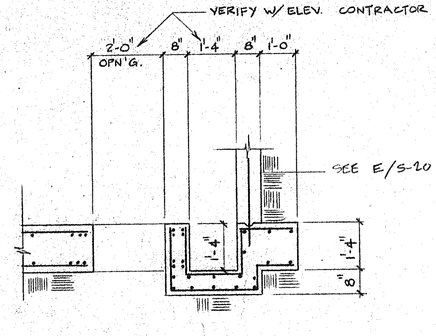

SUMP PIT SECTION 9/S-2
1/2"=1'-0"

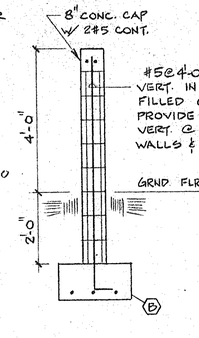

SECTION 8/S-2
1/2"=1'-0"

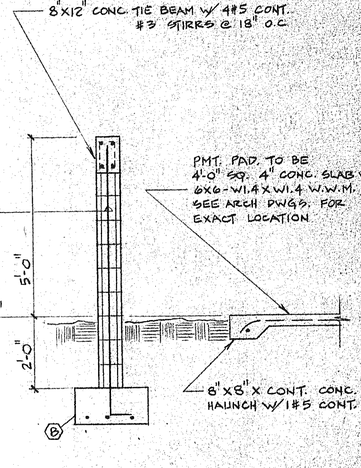

SECTION 7/S-2
1/2"=1'-0"

SUNSET BEACH
SOUTH LONG BOAT KEY
BUILDING
ISSUED: 12-10-82
REVISED: 1-4-83
SHEET