OVERLAYS	COMPOSITE
1	1
14	14
15	15

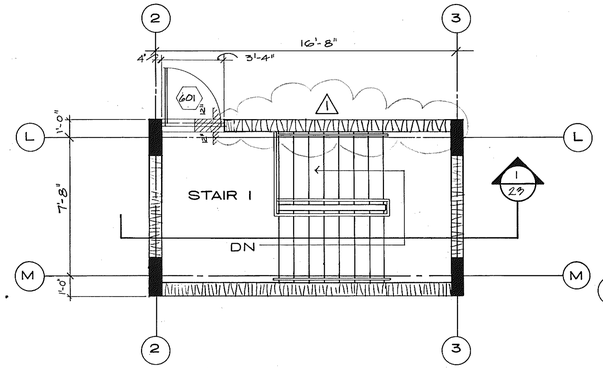

ROOF FLOOR PLAN

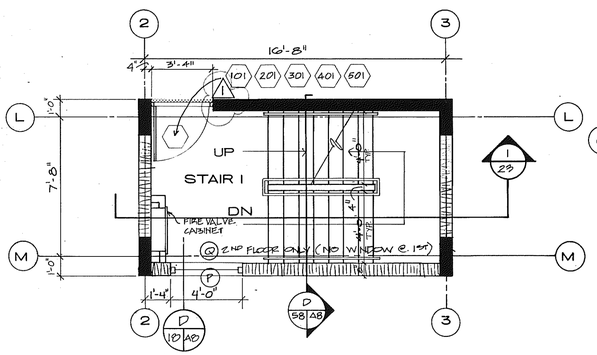

TYPICAL FIRST THRU FIFTH FLOOR PLAN

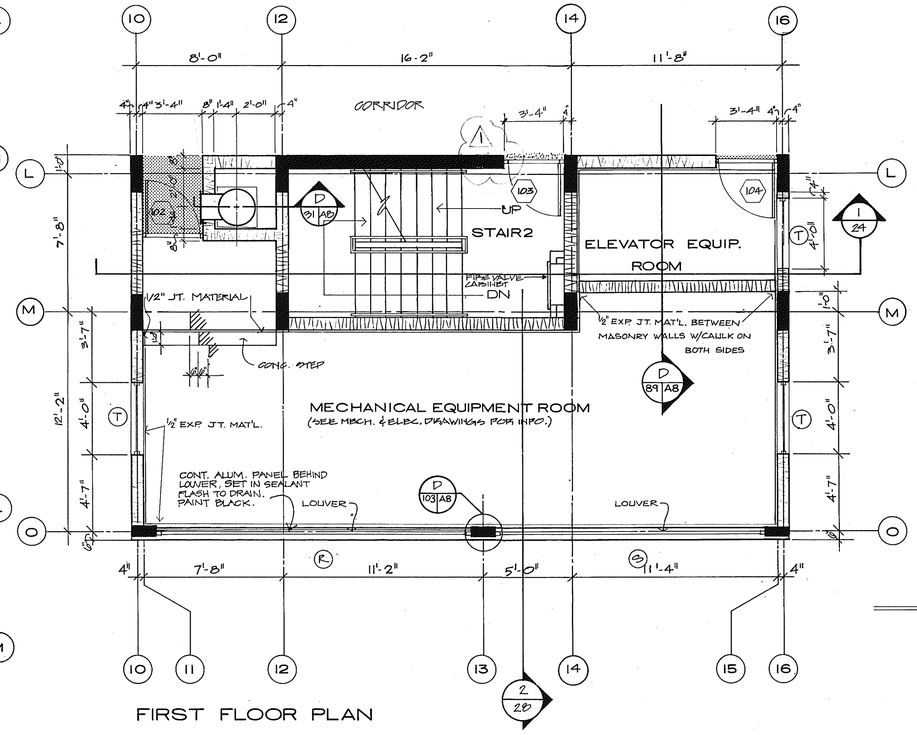

FIRST FLOOR PLAN

TOWER 2

GROUND FLOOR PLAN

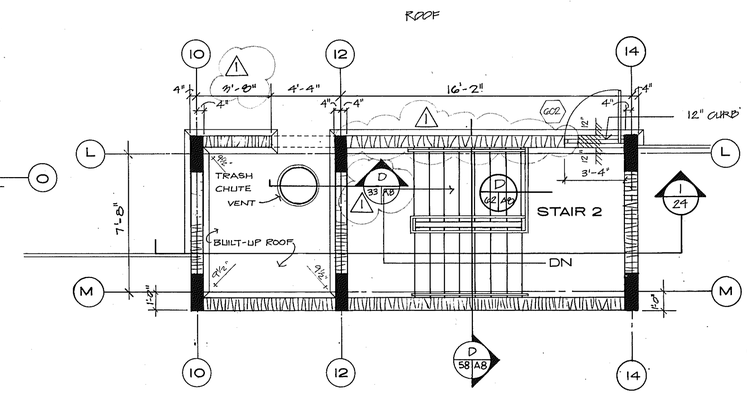

ROOF FLOOR PLAN

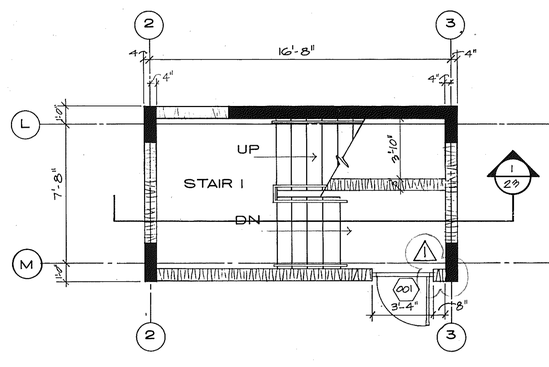

GROUND FLOOR PLAN

TOWER 1

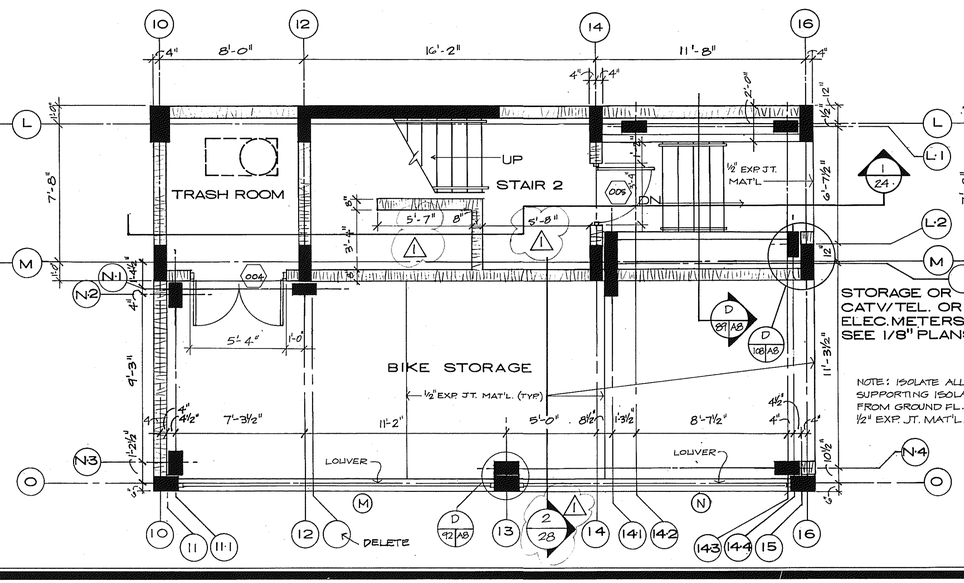

STORAGE OR CATV/TEL. OR ELEC. METERS SEE 1/8" PLANS

NOTE: ISOLATE ALL COLS. SUPPORTING ISOLATED SLAB FROM GROUND FL. SLAB W/ 1/2" EXP. JT. MAT'L. ALL SIDES

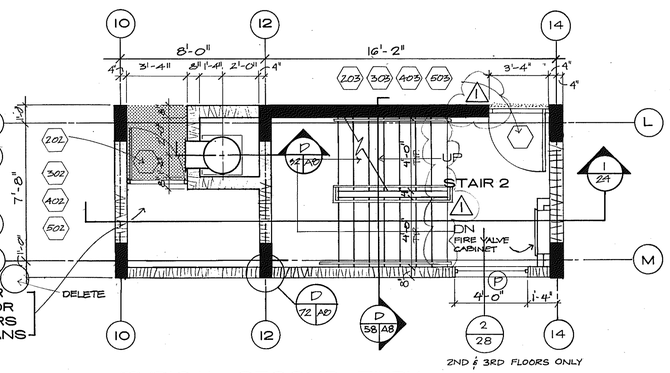

2ND & 3RD FLOORS ONLY

TYPICAL SECOND THRU FIFTH FLOOR PLAN

SUNSET BEACH OF LONGBOAT KEY

BUILDING I STAIR TOWERS

1/4" = 1'-0"

ARVIDA CORPORATION · EDWARD J SEIBERT AIA ARCHITECT & PLANNER PA · THE SWA GROUP
BRABHAM KUHNS DEBAY CONSULTING ENGINEERS · OLSEN WHITE & ASSOCIATES STRUCTURAL ENGINEERS · BENNETT & BISHOP INC CONSULTING ENGINEERS & SURVEYORS

ISSUED
10 DEC. 82

REVISED
1 4-1-83

SHEET A·8 OF 37