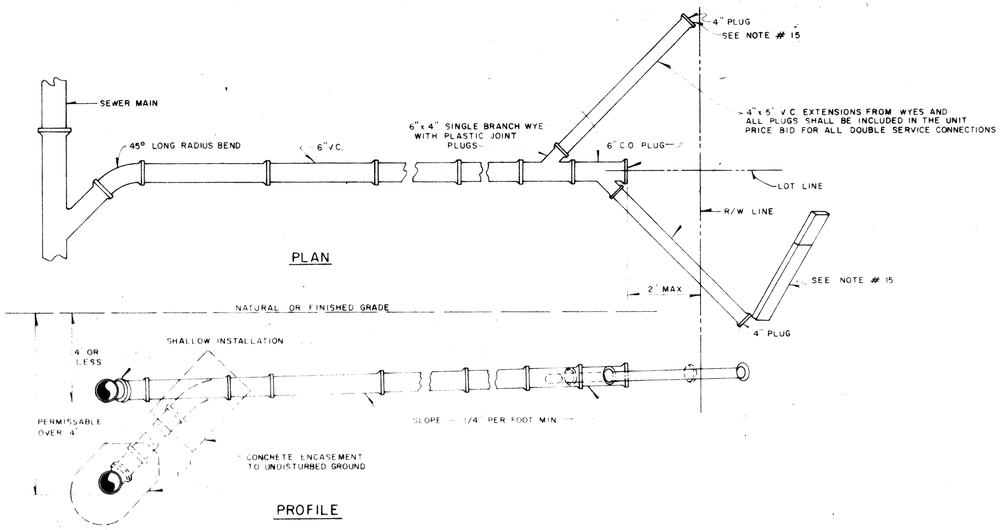

SERVICE CONNECTION

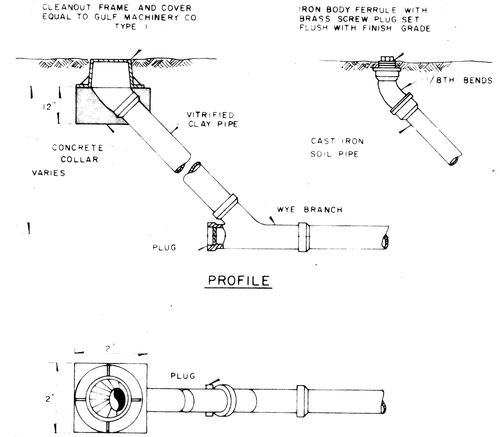

CLEANOUT DETAILS

GENERAL SPECIFICATIONS

1. TRENCH SHALL BE BRACED OR SHORED AS REQUIRED.
2. WIDTH OF TRENCH SHALL BE OUTSIDE DIAMETER OF PIPE SOCKET PLUS 24 INCHES.
3. MANHOLES SHALL COMPLY WITH A.S.T.M. SPECIFICATION C-478, LATEST REVISION "PRECAST REINFORCED CONCRETE MANHOLE SECTIONS."
4. CEMENT SHALL BE TYPE II.
5. CONCRETE SHALL BE 3,000 P.S.I. /28 DAY MINIMUM STRENGTH.
6. MANHOLE RING AND COVER, D.O.T., APPROVED, APPROXIMATE WEIGHT 325 LBS., U. FOUNDRY DWG. NO. A102 ALL BEARING SURFACES SHALL BE MACHINED TO PREVENT RATTLING UNDER TRAFFIC. COVER TO BE NON-SKID 3/8 SQUARE PATTERN WITH DESIGNATION SANITARY SEWER AND HAVE (2) TWO CONCEALED PICKHOLES.
7. REINFORCING PER A.S.T.M. SPEC. C-478 LATEST REVISION.
8. MORTAR SHALL BE 2 PARTS CLEAN SAND AND 1 PART CEMENT WITH NO MORE THAN 1/4 PART HYDRATED LIME.
9. MORTAR JOINTS SHALL BE FULL AND STRUCK FLUSH.
10. A DROP CONSTRUCTION SHALL BE PROVIDED FOR A SEWER ENTERING A MANHOLE AT AN ELEVATION OF 24 INCHES OR MORE ABOVE THE MANHOLE CHANNEL FLOWLINE.
11. NO STEPS SHALL BE USED.
12. COMPLETELY FILL SPACE BETWEEN PIPES AND MANHOLE WALL WITH CEMENT MORTAR AFTER PIPE IS SET. 15 LB. EMBECO PER 100 LB. CEMENT.
13. FOR 4' DIAMETER MANHOLE. DEPTHS GREATER THAN 12' ADDITIONAL FLOTATION BALLAST CONCRETE SHALL BE POURED IN BOTTOM SECTION UNDER PIPE AT A RATE OF 4" CONCRETE FOR EACH ADDITIONAL FOOT OF MANHOLE DEPTH. BALLAST MAY NOT BE REQUIRED IF 6" LIP IS PROVIDED AT BASE AS SHOWN IN DETAIL.
14. 3" MINIMUM FOR PIPE 24" DIAMETER AND SMALLER. 4" MINIMUM FOR PIPES LARGER THAN 24" DIAMETER.
15. WHERE A HOUSE OR OTHER CONNECTION TERMINATES, THE CONTRACTOR SHALL PROVIDE AND INSTALL A 2" x 4" STAKE, MINIMUM 2' ABOVE AND 2' BELOW GROUND, THE TOP 12" TO BE PAINTED RED.
16. WHERE WATER AND SEWER MAINS CROSS WITH LESS THAN 18" VERTICAL CLEARANCE THE SEWER WILL BE 20' OF EITHER CAST IRON PIPE OR CONCRETE ENCASED VITRIFIED CLAY PIPE, CENTERED ON THE POINT OF CROSSING. WHEN A WATER MAIN PASSES OVER A SEWER MAIN, A SEPARATION OF 6" LEAST 18" SHOULD BE MAINTAINED WHERE PRACTICABLE.

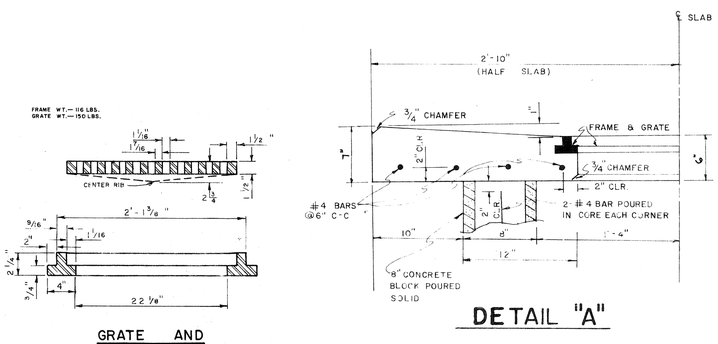

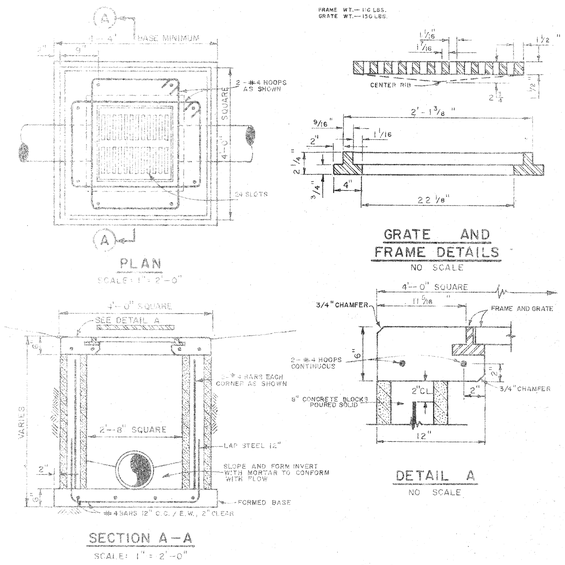

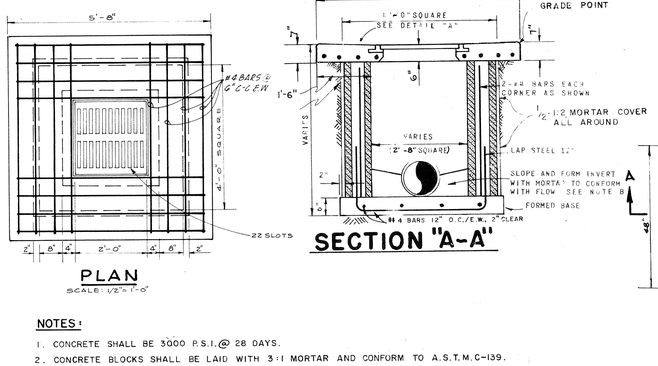

NOTES:

1. CONCRETE SHALL BE 3000 P.S.I. @ 28 DAYS.
2. CONCRETE BLOCKS SHALL BE LAID WITH 3:1 MORTAR AND CONFORM TO A.S.T.M. C-139.
3. GRATE SHALL BE NO. 3 DRAIN FRAME AND GRATE AS MANUFACTURED BY U.S. FOUNDRY CO., MIAMI, FLA., OR APPROVED EQUAL.
4. FLOW LINE (℄) AND TOP GRATE (T.G.) ELEVATIONS SHALL BE DETERMINED BY THE ENGINEER.
5. GRATES SHALL BE PLACED TO CONFORM GEOMETRICALLY WITH PROPOSED BUILDINGS, SIDEWALKS ETC.

ROADWAY TYPE "D" INLET
NO SCALE

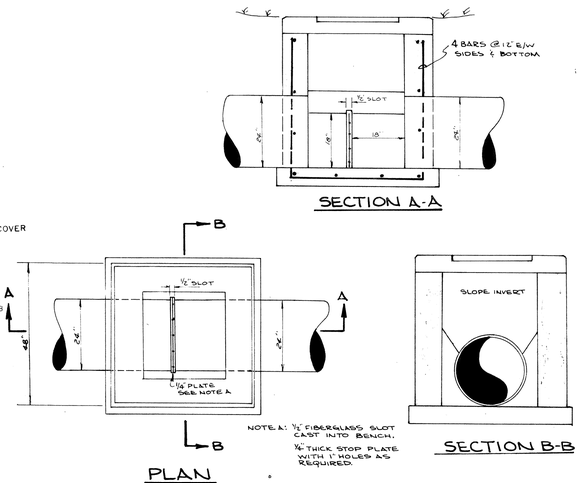

MODIFIED TYPE "D" INLET
NO SCALE

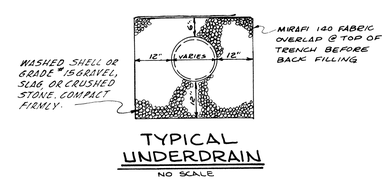

TYPICAL UNDERDRAIN
NO SCALE

AS BUILT PLANS
Date 6/15/81 By MSY

TYPICAL PAVEMENT SECTION
NO SCALE

LTR.	DATE	REVISION	BY
"A"	6-23-80	CHANGED TYPE II TO TYPE III ASPHALTIC CONCRETE	MJY

FOR: HARRY A. MACEWEN, ARCHITECT

DRAINAGE & WASTEWATER COLLECTION DETAILS
SAILBOAT SQUARE

SMALLY, WELLFORD & NALVEN, Inc. CONSULTING ENGINEERS & SURVEYORS
SARASOTA, FLA.

SCALE: AS SHOWN | DATE: MAY, 1980 | DESIGNED BY: J.G. | DRAWN BY: J.L.D. | CHECKED BY: | PROJECT NO. 2041

6-25-81
DONALD G. SMALLY, P.E. FLA. CERT. NO. 5051

DRAWING NUMBER 3
REVISION A

INDEX NO. 4-2041-007