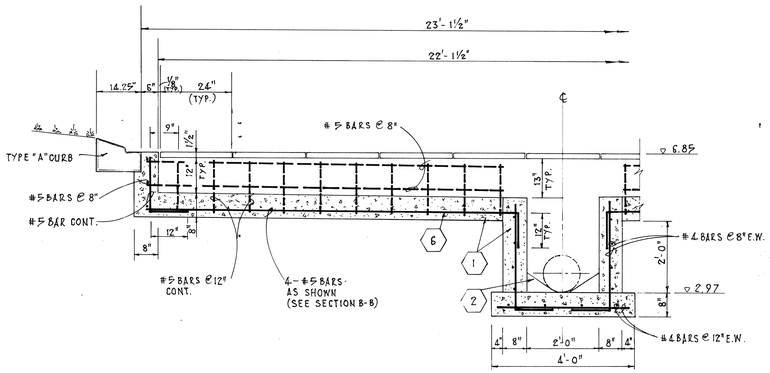

SECTION A-A

SCALE : ½" = 1'-0"

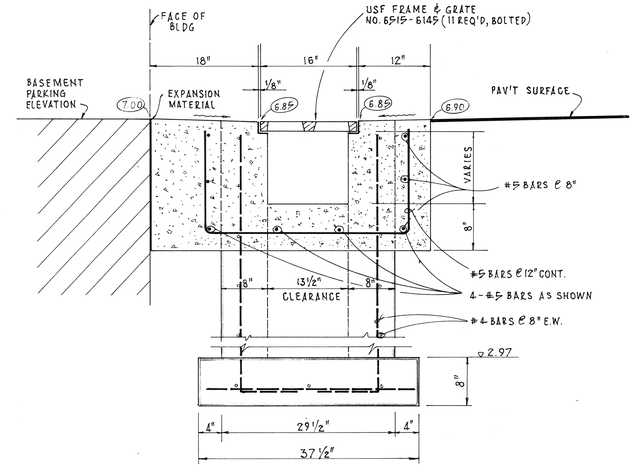

SECTION B-B

SCALE : ½" = 1'-0"

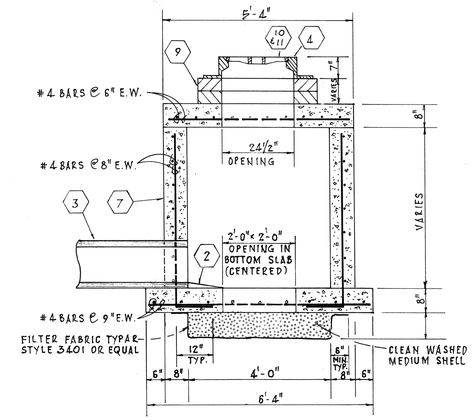

SECTION A-A

SCALE : 1½" = 1'-0"

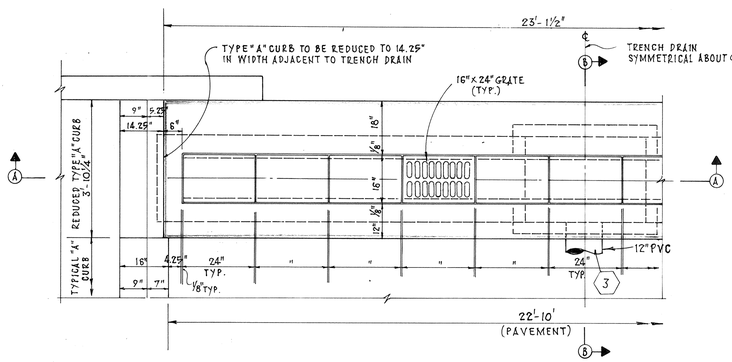

TRENCH DETAIL PLAN

SCALE : ½" = 1'-0"

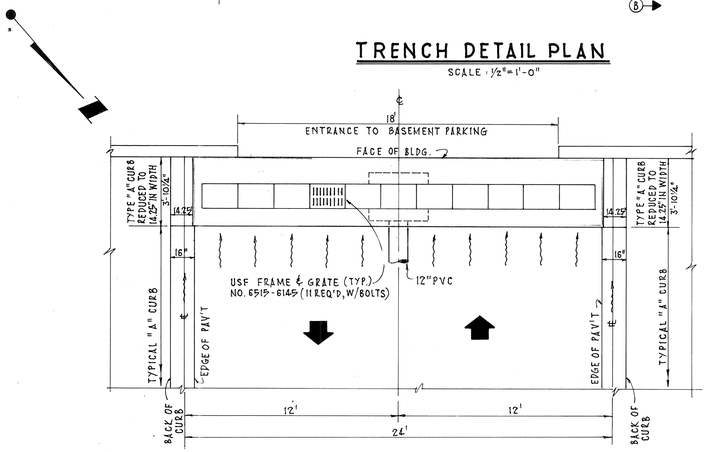

PLAN - VIEW

SCALE : ¼" = 1'-0"

TYPICAL TRENCH DRAIN DETAIL

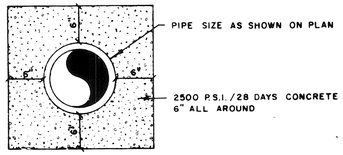

CONCRETE ENCASEMENT

NO SCALE

CONSTRUCTION NOTES

1. 4000 PSI CONCRETE @ 28 DAYS SHALL BE USED THROUGHOUT.
2. POURED CONCRETE INVERT AFTER INLET AND PIPES ARE PLACED IN GROUND, 3000 PSI @ 28 DAYS MINIMUM.
3. SEE PLAN AND PROFILE DRAWINGS FOR PIPE SIZE AND ALIGNMENT.
4. FRAMES TO BE COATED WITH 2 APPLICATIONS OF A BITUMINOUS BASED PAINT SUCH AS INTEROL 49 [illegible] OR EQUAL.
5. ALL WORK TO CONFORM TO THE SPECIFICATIONS OF THE TOWN OF LONGBOAT KEY PUBLIC WORKS DEPARTMENT.
6. REINFORCING STEEL SHALL BE INTERMEDIATE GRADE BILLET WITH DEFORMATIONS CONFORMING TO A.S.T.M. A-615-76a. ALL STEEL SHALL BE 1-1/2" CLEAR UNLESS OTHERWISE NOTED.
7. TYPE "B" INLET AND STORM MANHOLE WALLS AND BOTTOMS SHALL BE REINFORCED CLASS "A" CONCRETE POURED IN PLACE OR APPROVED PRECAST BOXES. (CONTRACTOR TO SUBMIT SHOP DRAWINGS FOR ALL PRECAST BOXES. WALL REINFORCING SHALL CONFORM WITH A.S.T.M. C-478, LATEST REVISIONS CONCRETE SHALL BE 4000 PSI @ 28 DAYS.)
8. TYPE "B" INLET AND STORM MANHOLE FRAMES, LIDS AND COVERS SHALL BE ADJUSTED TO CONFORM WITH FINISHED SURFACES. ALL ADJUSTMENTS SHALL BE INCLUDED IN THE PRICE BID. NO ADDITIONAL COMPENSATION WILL BE MADE BY THE OWNER.
9. 4" MASONRY BRICKS SHALL BE USED TO BRING STORM MANHOLE/TYPE "B" INLET COVER TO REQUIRED GRADE IF NECESSARY UTILIZING 2:1 SAND CEMENT.
10. STORM MANHOLE RING AND COVER U.S.F. NO. 260 (TYPE "B") LETTERED "STORM SEWER". TRAFFIC BEARING TYPE, NON-SKID SURFACE SHALL BE USED FOR STORM MANHOLE.
11. STRUCTURES S-6B & S-8B SHALL BE CONSTRUCTED WITH USF 3130 GRATE & FRAME FOR HEAVY DUTY. STRUCTURES S-9, S-10, S-11, S-13 & S-15 SHALL BE CONSTRUCTED WITH USF 3107 FOR MEDIUM DUTY.

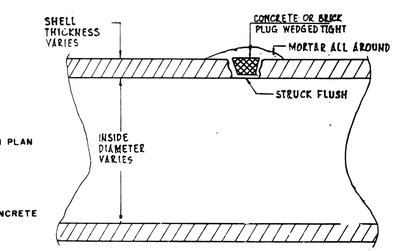

PLUGGING DETAIL FOR LIFT HOLES IN R.C.P. PIPES

N.T.S.

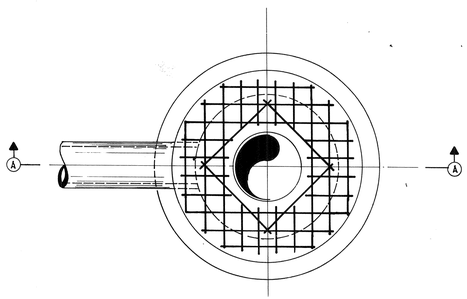

PLAN

SCALE : ½" = 1'-0"

TYPE "B" INLET OR STORM MANHOLE

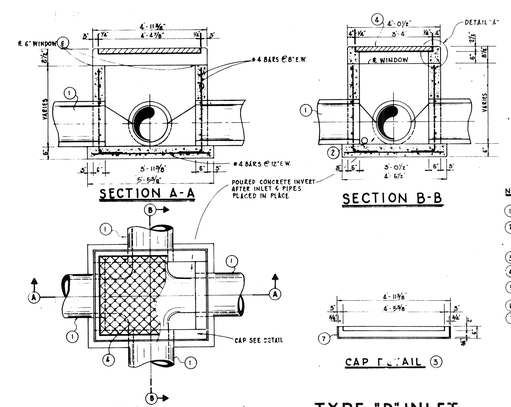

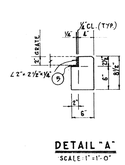

NOTES:

1. SEE PLAN & PROFILE DRAWINGS FOR PIPE SIZE & ALIGNMENT.
2. ALL INLETS SHALL HAVE 6" DIA. HOLE AT THE BOTTOM OF THE BOX CLOSE OF THE PIPE CONSTRUCTION, TO BE PLUGGED WHEN CONCRETE INVERT IS FORMED.
3. CAP PIECE MAY BE POURED AS A SEPARATE PIECE & SET IN 2:1 SAND CEMENT.
4. U.S.F. GRATE NO. 6819 (STEEL 4'-4⅝" x 5'-4" x 2") WT. 219 LB.
5. FRAME SHALL BE OF STEEL CONSTRUCTION COATED W/2 APPLICATIONS OF INTEROL 49, 12 MILS DRY FILM THICKNESS EACH COAT, 24 MILS TOTAL.
6. SEE THE PLAN & PROFILE DRAWINGS FOR THE LOCATIONS OF WINDOWS IF REQUIRED IN THE RESPECTIVE TYPE "B" INLETS.
7. ¼" CHAMFER ALL EXPOSED EDGES.

LTR.	DATE	REVISION	BY
A	10/9/90	REVISED NOTE #11 & ADD TYPE-D-INLET	WF/RB
B	11/13/90	REVISED BOTTOM SLAB OF INLET TYPE-"B"	WF/RB

SCALE:	DATE:	DESIGNED BY
AS SHOWN	JULY, 1990	J.M.B.
DRAWN BY	CHECKED BY	PROJECT NO.
E.P.		2591

MILLARD J. YODER, P.E., FLA. CERT. NO. 25765

SARASOTA, FLA. 33582

133 SOUTH McINTOSH RD.

CONSULTING ENGINEERS & SURVEYORS

SMALLY, WELLFORD & NALVEN, Inc.

L'AMBIANCE

STORMWATER CONSTRUCTION DETAILS

FOR: YALE PROPERTIES

DRAWING NUMBER 10

REVISION "B"

INDEX NO. G-2591-015

L'AMBIANCE