UNDERDRAIN NOTES:

TYPE "A" AGGREGATE: FILTER AGGREGATE FOR UNDERDRAINS SHALL CONSIST OF WASHED MATERIAL MEETING FDOT ROAD & BRIDGE SPECIFICATIONS FOR SILICA SAND & QUARTZ GRAVEL CONTAINING LESS THAN 1% (BY WEIGHT) OF SILT, CLAY AND ORGANIC MATTER. SAID MATERIAL SHALL HAVE UNIFORMITY COEFFICIENT OF 1.5 OR GREATER, AN EFFECTIVE GRAIN SIZE OF 0.20 – 0.55 MILLIMETER AND SIEVE ANALYSIS (IN PERCENT OF TOTAL WEIGHT PASSING) AS FOLLOWS:

3/8" = 95 – 100%
NO. 4 = 95 – 100%
NO. 8 = 85 – 100%
NO. 16 = 65 – 97%
NO. 30 = 25 – 70%
NO. 50 = 5 – 35%
NO. 100 = 0 → 7%
NO. 200 = MAX. 2%

THE AGGREGATE SHALL BE FREE OF ORGANIC MATTER AND OTHER DELETERIOUS MATERIALS. WASHED SHELL & LIMEROCK SHALL NOT BE USED FOR FILTER AGGREGATE. PERMEABILITY OF THE AGGREGATE SHALL BE 3.5 FT/HR. MINIMUM.

TYPE "B" AGGREGATE: 3/4" TO 1" STONE, RIVER GRAVEL, OR EQUAL (NO LIMEROCK, MARL, OR SIMILAR MATERIAL)

UNDERDRAIN: THE 6" UNDERDRAIN SHALL BE SLOTTED CORRUGATED POLYETHYLENE PIPE A.S.T.M F-405-77 OR A.A.S.H.T.O. M-252 HAVING A MINIMUM SLOTTED AREA OF 1 SQ. IN./FT. OF PIPE MANUFACTURED BY A.D.S., OR HANCOR. PIPE SHALL BE FACTORY PREWRAPPED WITH FILTER FABRIC.

TESTING: THE CONTRACTOR SHALL PROVIDE THE ENGINEER WITH SIEVE ANALYSIS & PERCOLATION TEST RESULTS PERFORMED BY AN INDEPENDENT TESTING LABORATORY PRIOR TO DELIVERY OF THE FILTER AGGREGATE MATERIAL ON SITE. FAILURE TO MEET THE SPECIFIED PERMEABILITY OR SIEVE ANALYSIS WILL BE CAUSE FOR REJECTION OF THE MATERIAL.

6" SLOTTED CORRUGATED POLYETHYLENE (CPE) PIPE. ASTM F-405-77 OR AASHTO M-252. BAR SLOTS TO MIN. ONE SQUARE INCH PER LF OF PIPE SHALL BE FACTORY PRE-WRAPPED WITH A FILTER FABRIC SOCK. SEE PLAN FOR SIZE AND LENGTHS REQUIRED.

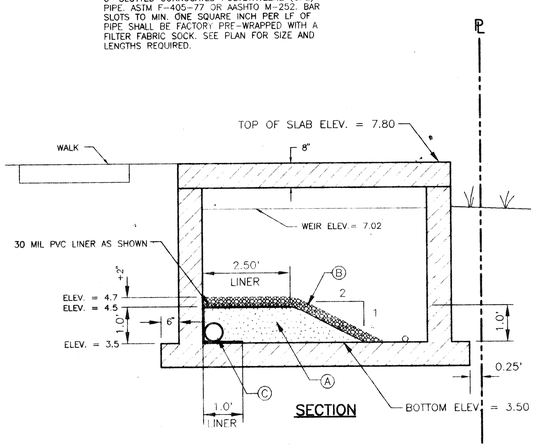

SECTION

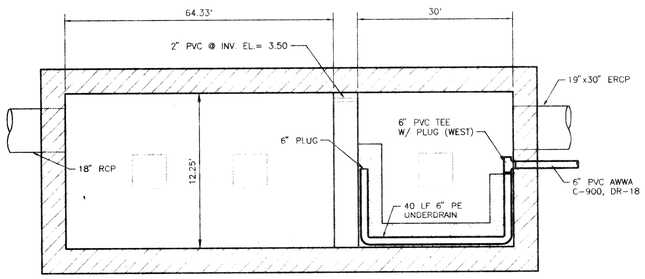

PLAN

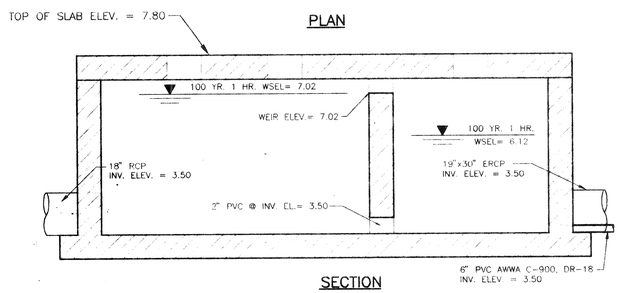

SECTION

LEGEND:

(A) TYPE "A" AGGREGATE.

(B) TYPE "B" AGGREGATE.

(C) 6" SLOTTED CORRUGATED POLYETHYLENE (CPE) PIPE. ASTM F-405-77 OR AASHTO M-252. BAR SLOTS TO MIN. ONE SQUARE INCH PER LF OF PIPE SHALL BE FACTORY PRE-WRAPPED WITH A FILTER FABRIC SOCK. SEE PLAN FOR SIZE AND LENGTHS REQUIRED.

NOTE:

THE PROPOSED STORMWATER VAULT SHALL BE CONSTRUCTED TO SUPPORT H-20 HIGHWAY LOADINGS. THE CONTRACTOR SHALL SUBMIT SHOP DRAWINGS FROM THE PRECASTER DEMONSTRATING COMPLIANCE WITH THIS CRITERIA.

STORMWATER MANAGEMENT BASIN SECTION

N.T.S.

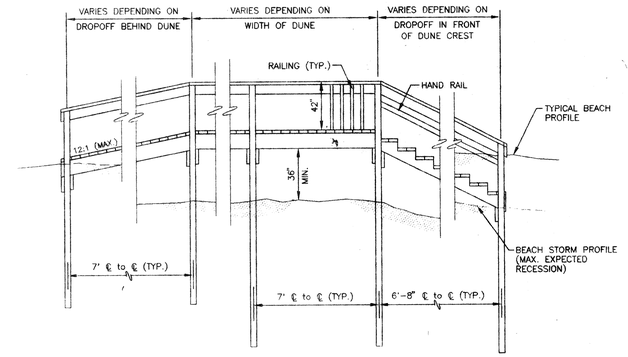

DUNE WALKOVER DETAIL

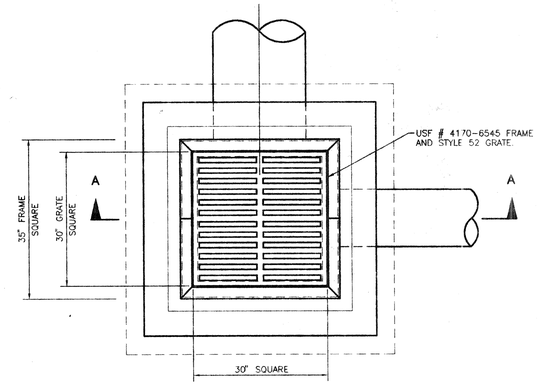

PLAN

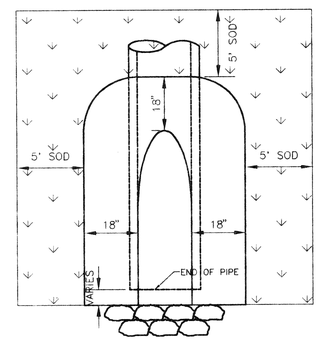

PLAN VIEW

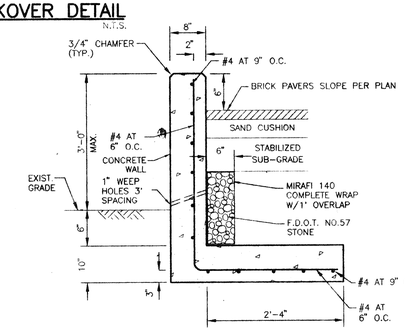

NOTE: DO NOT CONSTRUCT 2'-4" FOOTER IN CONFLICT W/ STRUCTURES S-1 & S-2. ADD THREE #4 BARS @ TOP, MIDPOINT & BOTTOM OF WALL TO 2' BEYOND OPENING WHERE FOOTER IS OMITTED.

CONCRETE RETAINING WALL DETAIL

N.T.S.

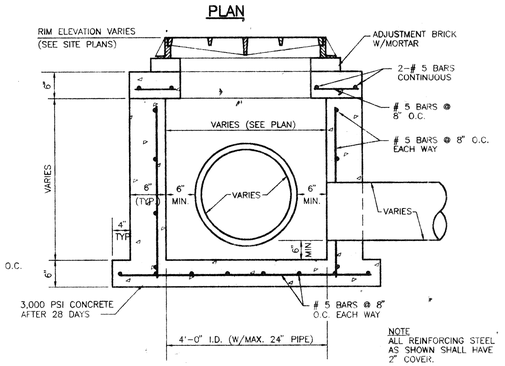

NOTE
ALL REINFORCING STEEL AS SHOWN SHALL HAVE 2" COVER.

SECTION A-A

GRATE INLET DETAIL

N.T.S.

GENERAL SITE CONSTRUCTION NOTES:

1. THERE SHALL BE NO CHANGE OR DEVIATION FROM THESE PLANS WITHOUT PRIOR APPROVAL BY THE ENGINEER.
2. ALL CLEARING AND GRUBBING DEBRIS IS TO BE REMOVED FROM SITE AND IS PART OF THE CLEARING AND GRUBBING ITEM.
3. ALL PROPOSED GROUND ELEVATIONS ARE FINISHED SOD ELEVATIONS. FINISH EARTHWORK GRADING SHALL BE 0.2 FEET BELOW ELEVATIONS SHOWN TO ALLOW FOR SOD THICKNESS.
4. SODDING INCLUDES MAINTAINING SLOPES AND SOD UNTIL COMPLETION AND ACCEPTANCE OF TOTAL PROJECT OR GROWTH IS ESTABLISHED, WHICHEVER COMES LAST. UNTIL THEN, ALL EROSION, SILTATION, AND MAINTENANCE OF GRADES AND GRASS IS THE RESPONSIBILITY OF THE CONTRACTOR.
5. CERTAIN TREES ARE DESIGNATED BY THE OWNER TO BE SAVED AND PROTECTED BY THE CONTRACTOR. IT IS ASSUMED THESE TREES ARE HEALTHY AND ARE EXPECTED TO BE PART OF THE LANDSCAPE DEVELOPMENT. THEREFORE, IF ANY TREE(S) ARE DAMAGED BY CONSTRUCTION OPERATIONS OR BY OTHER MEANS (EXCLUDING LIGHTNING, WINDSTORM AND OTHER ACTS OF GOD) PERISHES WITHIN THE CONSTRUCTION PERIOD, IT SHALL BE THE RESPONSIBILITY OF THE CONTRACTOR TO REMOVE AND DISPOSE OF THOSE TREES. NO ADDITIONAL COMPENSATION SHALL BE MADE BY THE OWNER FOR THE LABOR, MATERIAL, OR MACHINERY REQUIRED TO REMOVE SAID TREE(S).
6. WHERE EXCAVATIONS ARE IN CLOSE PROXIMITY OF TREES, THE CONTRACTOR SHALL USE EXTREME CARE IN NOT DAMAGING THE ROOT SYSTEM. NO EQUIPMENT, SUPPLIES, OR VEHICLES SHALL BE STORED OR PARKED WITHIN THE DRIP LINE OF TREES TO REMAIN AND BE PRESERVED. IT SHALL BE THE RESPONSIBILITY OF THE CONTRACTOR TO INFORM ALL OF HIS EMPLOYEES AND SUBCONTRACTORS OF THIS REQUIREMENT AND TO ENFORCE SAME.
7. NOTIFY U.N.C.L.E. (1-800-432-4700) OR C.A.N.D.Y. (1-800-282-8881), THE TOWN OF LONGBOAT KEY PUBLIC WORKS DEPARTMENT, FLORIDA POWER & LIGHT, PEACE RIVER ELECTRIC, GENERAL TELEPHONE COMPANY AND ANY OTHER UTILITIES (GAS COMPANIES, CABLE T.V., ETC.) PRIOR TO CONSTRUCTION OPERATION AND PRIOR TO ANY CONNECTION TO EXISTING UTILITES. IT IS THE CONTRACTORS RESPONSIBILTY TO PROTECT EXISTING UTILITIES FROM DAMAGE.
8. ALL UTILITY LINES, STORM DRAIN LINES AND ACCESSORIES SUCH AS, BUT NOT LIMITED TO, MANHOLES, CLEANOUTS, SEWER AND WATER SERVICES, VALVES, FIRE HYDRANTS AND INLETS SHALL BE CONSTRUCTED TO ALIGNMENT AND LOCATIONS SHOWN ON PLANS UNLESS OTHERWISE DIRECTED BY THE ENGINEER.
9. CLEARING, GRUBBING, STRIPPING, AND COMPACTION SHALL BE INSPECTED BY THE ENGINEER OR HIS DULY APPOINTED REPRESENTATIVE PRIOR TO FILLING.
10. PRIOR TO THE START OF CONSTRUCTION ACTIVITIES, PRESERVE AREAS WITHIN AND ADJOINING THE AREA OF CONSTRUCTION ACTIVITY SHALL BE PROTECTED BY ERECTION OF TREE PROTECTION BARRICADES AND/OR SILT BARRIERS. SILT BARRIERS SHALL BE CONSTRUCTED IN ACCORDANCE WITH THE BEST MANAGEMENT PRACTICES DETAIL DRAWING. THE CONTRACTOR IS RESPONSIBLE TO OBTAIN ANY REQUIRED TREE REMOVAL PERMIT FROM THE TOWN OF LONGBOAT KEY.
11. ALL DISTURBED AREAS ARE TO BE SODDED AS SOON AS PRACTICAL TO PREVENT EROSION.
12. ALL PROVISIONS IN THE BEST MANAGEMENT PRACTICES PLAN SHALL BE ADHERED TO.
13. THE CONTRACTOR SHALL ADHERE TO AND HAVE A COPY OF THE D.E.P. PERMIT FOR THE PROJECT ON SITE.
14. ALL ELLIPTICAL CONCRETE PIPE AND ALL ROUND CONCRETE PIPE IN R/W SHALL HAVE A FILTER FABRIC JACKET MINIMUM 12" EACH SIDE OF JOINT WITH MINIMUM 24" OVERLAP AT SEAM PER FDOT INDEX #280 & #199.

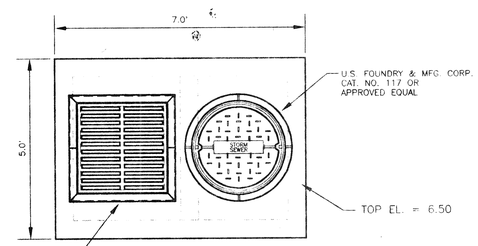

TOP

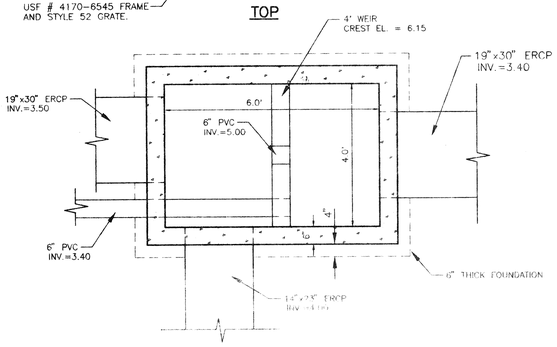

PLAN

STORM WATER CONTROL STRUCTURE (S-1)

N.T.S.

NOTES:

1. CONCRETE SHALL BE 3000 P.S.I. @ 28 DAYS
2. CHAMFER ALL EXPOSED EDGES 3/4".
3. RIP-RAP SHALL BE SUPPLIED AND CONSTRUCTED AS DEFINED IN THE F.D.O.T. SPECIFICATIONS SEC. 530, "RIP-RAP", SPECIFICALLY SEC. 530-3.1 OR SEC. 530-3.3 "CONSTRUCTION METHODS" EXCEPT THE MEASUREMENT SHALL BE AS DEFINED IN THE CONTRACT DOCUMENTS, PER SQUARE YARD. RIP RAP SHALL BE INCLUDED INCOST OF MITERED END SECTION.

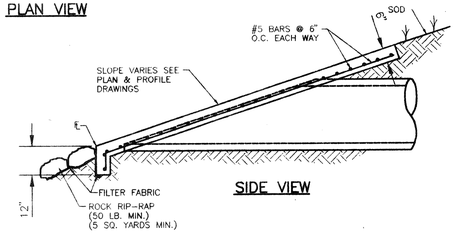

SIDE VIEW

MITERED END SECTION

S-D022 N.T.S.

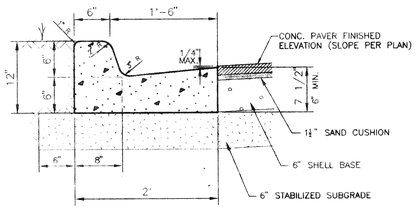

CURB NOTES:

1) CONCRETE SHALL HAVE A COMPRESSIVE STRENGTH OF 3,000 P.S.I. IN 28 DAYS UNLESS OTHERWISE NOTED.

2) WHEN USED ON THE HIGH SIDE OF THE ROADWAYS THE CROSS SLOPE OF THE GUTTER SHALL MATCH THE CROSS SLOPE OF THE ADJACENT PAVEMENT.

3) AN EXPANSION JOINT WILL BE PLACED AT THE END OF ALL RETURNS AT INTERVALS NOT TO EXCEED 50'. CONSTRUCTION JOINTS AT A MAXIMUM SPACING OF 10' SHALL BE SAW CUT 1-1/2" DEEP.

4) EXPANSION JOINTS SHALL BE CONSTRUCTED WITH 1/2" BITUMINOUS IMPREGNATED EXPANSION JOINT MATERIAL.

FDOT TYPE "F" CURB

S-P005 N.T.S.

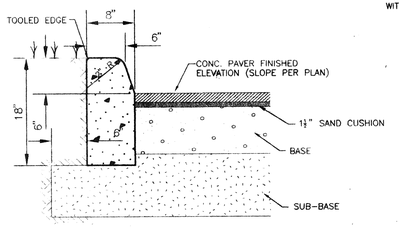

CURB NOTES:

1) CONCRETE SHALL HAVE A COMPRESSIVE STRENGTH OF 3,000 P.S.I. IN 28 DAYS UNLESS OTHERWISE NOTED.

2) AN EXPANSION JOINT WILL BE PLACED AT THE END OF ALL RETURNS AT INTERVALS NOT TO EXCEED 50'. CONSTRUCTION JOINTS AT A MAXIMUM SPACING OF 10' SHALL BE SAW CUT 1-1/2" DEEP.

3) EXPANSION JOINTS SHALL BE CONSTRUCTED WITH 1/2" BITUMINOUS IMPREGNATED EXPANSION JOINT MATERIAL.

TYPE "D" CURB

S-P002 N.T.S.

CONCRETE RIBBON AND PAVER BRICK INTERFACE EDGE RESTRAINT DETAIL

N.T.S.

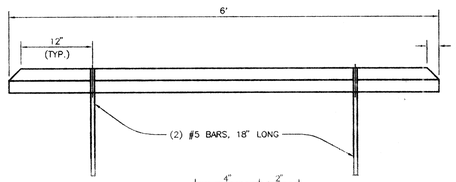

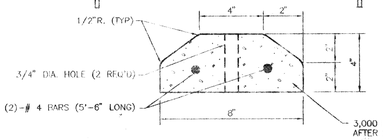

PRECAST CONCRETE WHEEL STOP

N.T.S.

PRINTED
JAN 09 1997
WILSON, MILLER, BARTON & PEEK, INC.

							DRAWN		EMP. NO.	DATE	
							DESIGNED BY				
							CHECKED BY				
							FIELD BOOK		PAGE		
SURV NO.	REVISION										

WILSON, MILLER, BARTON & PEEK, INC.

ENGINEERS • SURVEYORS • PLANNERS • ENVIRONMENTAL CONSULTANTS
LANDSCAPE ARCHITECTS • CONSTRUCTION MANAGERS
233 South Michigan Road
Sarasota Florida 34232
(941) 371-3890 FAX (941) 371-7090

CLIENT: WEDEBROCK DEVELOPMENTS L.C.

TITLE: PAVING, GRADING AND DRAINAGE DETAILS

PROJECT: THE GRANDE

DATE: 5-90	DESIGN W.O.#: 6223	REGISTERED PROFESSIONAL ENGINEER NO. 33789
HORIZONTAL SCALE:		
VERTICAL SCALE:	PROJECT NO.: 1804-5	SHEET NUMBER: 6 OF 9
SEC: 36 TWP: 35S RGE: 19E		

1/9/97

AUTO CAD 13-1904 - 027

Jan 09, 1997 - 07:16:34 - J:\1804\1804-05\8040206.dwg