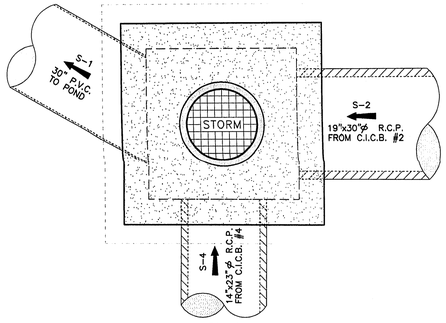

PLAN

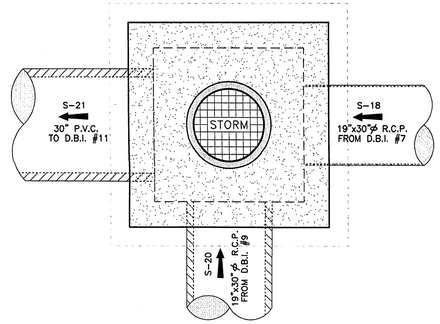

PLAN

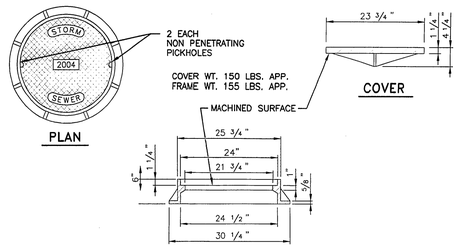

PLAN

FRAME

TRAFFIC BEARING FRAME & COVER

N.T.S.

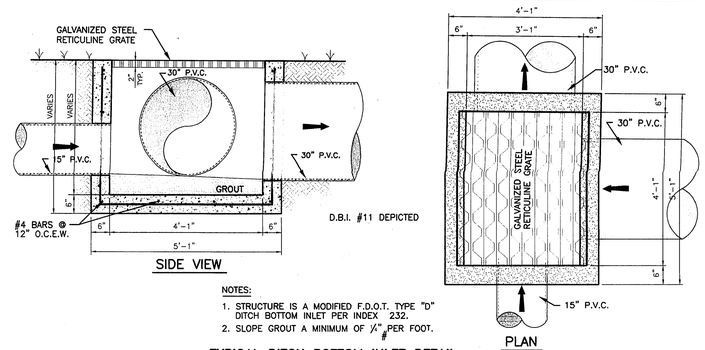

SIDE VIEW

PLAN

NOTES:

1. STRUCTURE IS A MODIFIED F.D.O.T. TYPE "D" DITCH BOTTOM INLET PER INDEX # 232.
2. SLOPE GROUT A MINIMUM OF 1/4" PER FOOT.

TYPICAL DITCH BOTTOM INLET DETAIL

SCALE: N.T.S.

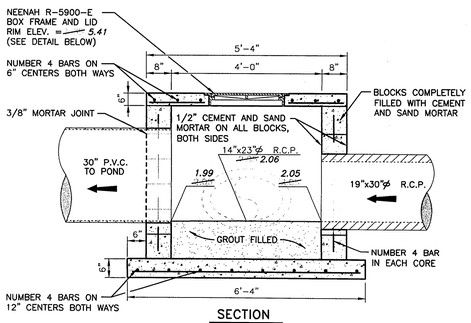

SECTION

JUNCTION BOX #1 DETAIL

N.T.S.

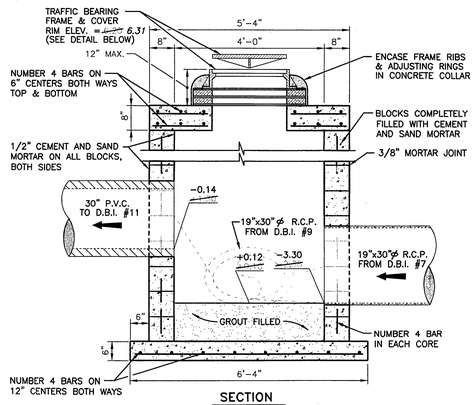

SECTION

JUNCTION BOX #2 DETAIL

N.T.S.

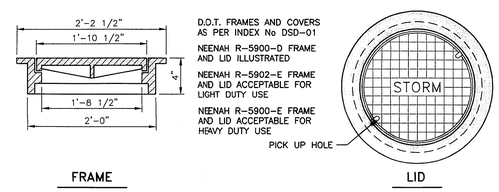

FRAME

LID

STORMWATER BOX FRAME AND LID DETAIL

N.T.S.

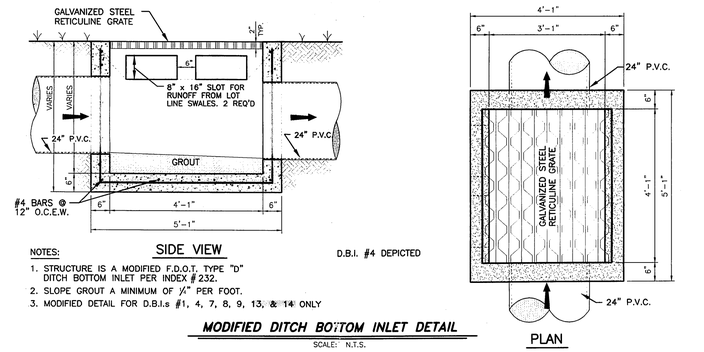

SIDE VIEW

PLAN

NOTES:

1. STRUCTURE IS A MODIFIED F.D.O.T. TYPE "D" DITCH BOTTOM INLET PER INDEX # 232.
2. SLOPE GROUT A MINIMUM OF 1/4" PER FOOT.
3. MODIFIED DETAIL FOR D.B.I.s #1, 4, 7, 8, 9, 13, & 14 ONLY

MODIFIED DITCH BOTTOM INLET DETAIL

SCALE: N.T.S.

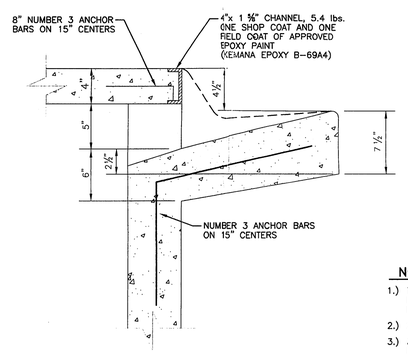

DETAIL "A"

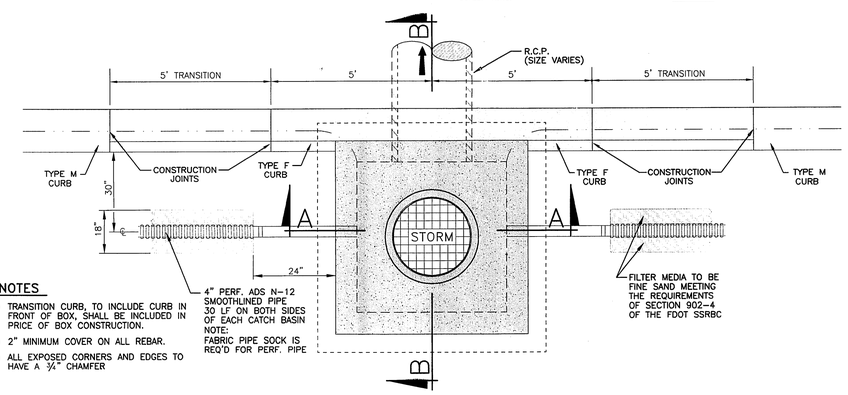

PLAN

NOTES

1.) TRANSITION CURB, TO INCLUDE CURB IN FRONT OF BOX, SHALL BE INCLUDED IN PRICE OF BOX CONSTRUCTION.
2.) 2" MINIMUM COVER ON ALL REBAR.
3.) ALL EXPOSED CORNERS AND EDGES TO HAVE A 3/4" CHAMFER

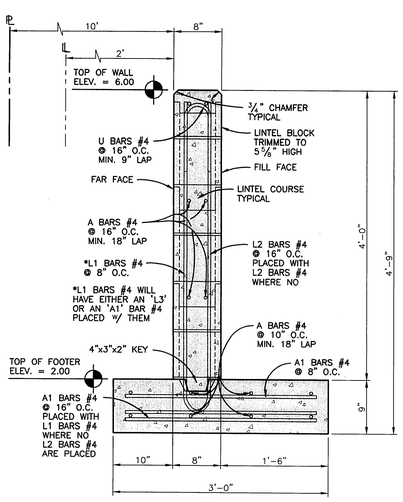

NOTES: 1. CONCRETE TO BE 4,000 P.S.I.
2. REBAR TO BE GRADE 60

RETAINING WALL SECTION

N.T.S.

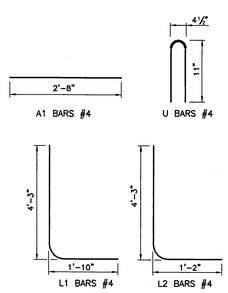

REBAR DATA

SCALE: N.T.S.

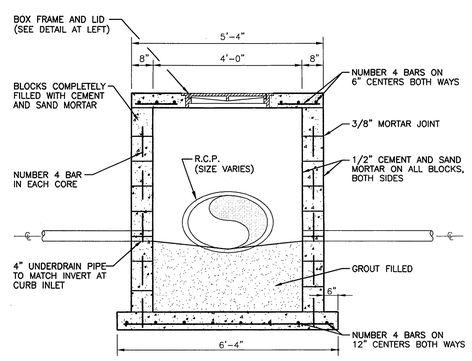

SECTION A-A

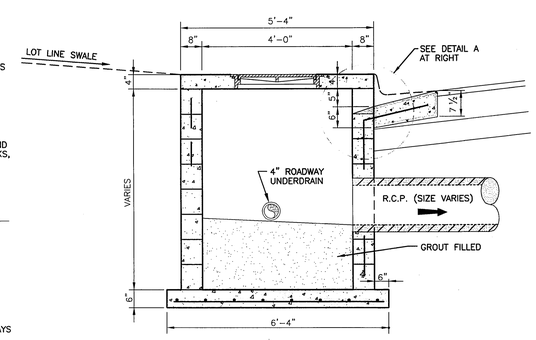

SECTION B-B

CURB INLET DETAIL

N.T.S.

GENERAL NOTES

1.) CONCRETE SHALL BE AS SPECIFIED IN SECTION 345 OF FLORIDA D.O.T. SPECIFICATIONS, 1977
2.) THE MORTAR SHALL BE OF PORTLAND CEMENT AND SAND MIXED IN THE PROPORTIONS OF ONE PART CEMENT TO THREE PARTS SAND. MASONRY CEMENT MAY BE USED IN LIEU OF MORTAR PROVIDED IT IS TYPE I OR TYPE II.
3.) IRON CASTINGS SHALL BE AS SPECIFIED IN SECTION 962-8 OF FLORIDA SPECIFICATIONS, 1977
4.) REINFORCEMENT STEEL SHALL BE AS SPECIFIED IN SECTION 931-1 OF FLORIDA D.O.T. SPECIFICATIONS 1977
5.) ALL REBAR TO HAVE A MINIMUM OF 2" COVER AND EXPOSED CORNERS AND EDGES TO HAVE A 3/4" CHAMFER
6.) WHERE MATERIAL UNSATISFACTORY FOR FOUNDATION IS ENCOUNTERED AT FLOOR ELEVATION, OMIT FLOOR AND CARRY WALLS DOWN TO SATISFACTORY FOUNDATION. BACKFILL TO FLOOR WITH CLEAN SAND.
7.) ALL STRUCTURES TO BE GROUTED UP TO SPRIG LINE OF OUTGOING PIPE.
8.) UNDERDRAINS SHALL BE AS SPECIFIED IN SECTION 440 OF FLORIDA D.O.T. SPECIFICATIONS, 1977

CYRUX ENGINEERING, INC.
Engineers & Surveyors
11144 Tallevast Rd. #111
Sarasota, Fla 34243
(941) 358-8812 (ph) * (941) 358-8909 (fax)

PROJECT NO. 03/0390 DRAWN BY E.S.D.
CHECKED BY J.M.P. DATE 12 APRIL 2004
REVISIONS DATE BY

SEAL: J. Mark Privette PE Fl. Reg.# 43394 MAY 08 2008 Date

COQUINA BEACH SUBDIVISION

STORMWATER CONSTRUCTION DETAILS

SHEET 12 OF 16

RECORD DRAWING: 12 MAY 2008

\\Server ... Engineering\Coquina Beach\ASBUILTS-MAY08\Coquina-01AB.plt 11:23:04 05/07/2008