A F 18867AB

GENERAL NOTES

1. GASOLINE STORAGE TANK - 10,000 GALLON GLASTEEL COATED UNDERGROUND TANK (ONE REQUIRED)
2. GASBOY STAINLESS STEEL HOSE REEL - WITH 50 FT 1 INCH MARINE HOSE (TWO REQUIRED)
3. GASBOY HIGH SPEED STAINLESS DISPENSER WITH CARD CONTROL CAPABILITIES (TWO REQUIRED)
4. 1-1/2 H.P. RED JACKET SUBMERGED PUMP WITH MANHOLE, CONTROL BOX AND LEAK DETECTOR. (ONE REQUIRED)

NOTE:

INSTALLATION SHALL BE IN ACCORDANC ATE & FEDERAL REGULATIONS.

(335)

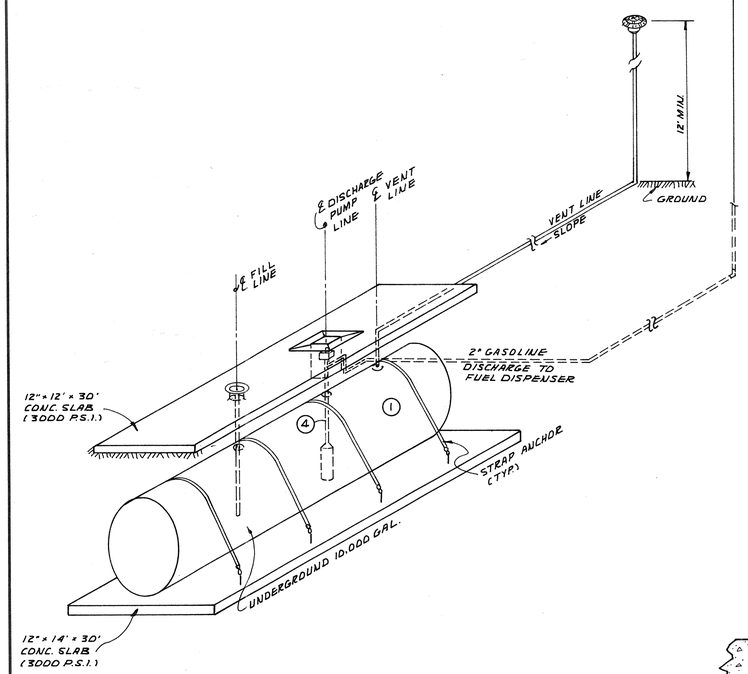

UNDERGROUND PIPING ISOMETRIC

N.T.S.

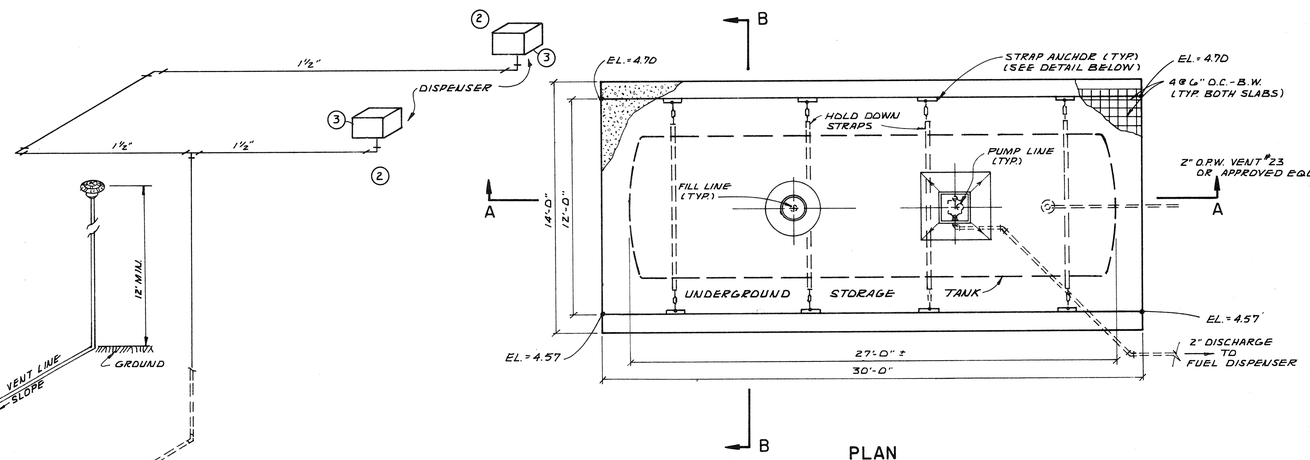

PLAN

1/4" = 1'-0"

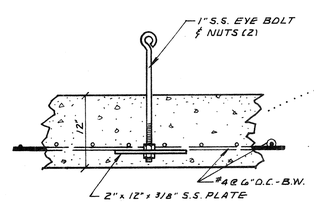

STRAP ANCHOR DETAIL

N.T.S.

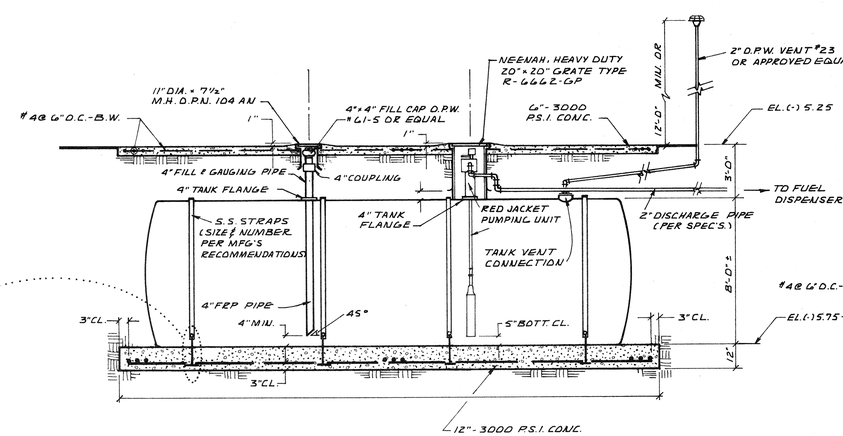

SECTION A-A

1/4" = 1'-0"

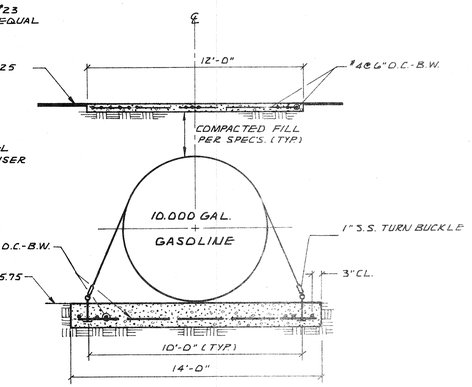

SECTION - B B

1/4" = 1'-0"

BENNETT & BISHOP
CONSULTING ENGINEERS & SURVEYORS SARASOTA FLORIDA

APPROVED BY

BY	DESCRIPTION	DATE

REVISE

DATE	5/14/85
SCALE	AS SHOWN
DESIGN	R.C.
DRAWN	R.C.
CHECK	F.V.
APPROVED	

THE BOATHOUSE AT LONGBOAT KEY
BARRY LEWIS

FUEL STORAGE TANK - MISC. DETAILS

DRAWING NO.