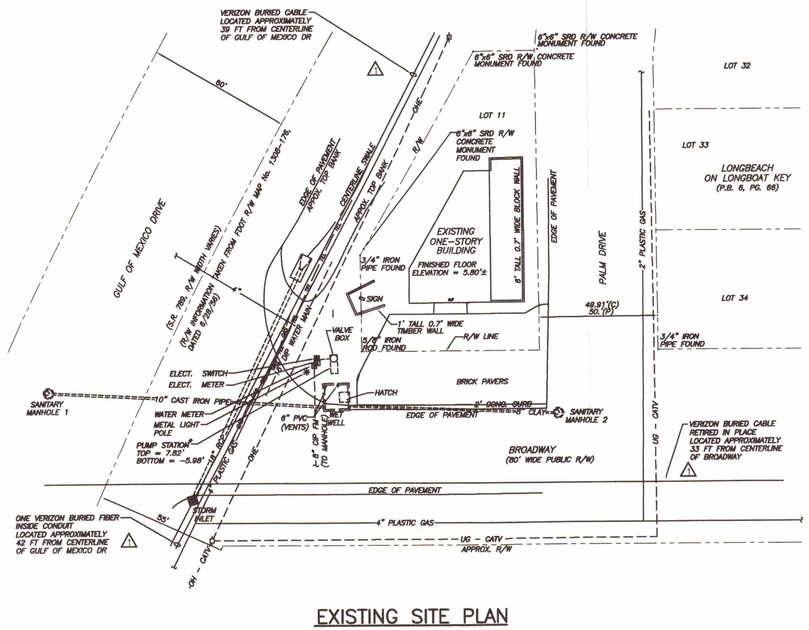

EXISTING SITE PLAN

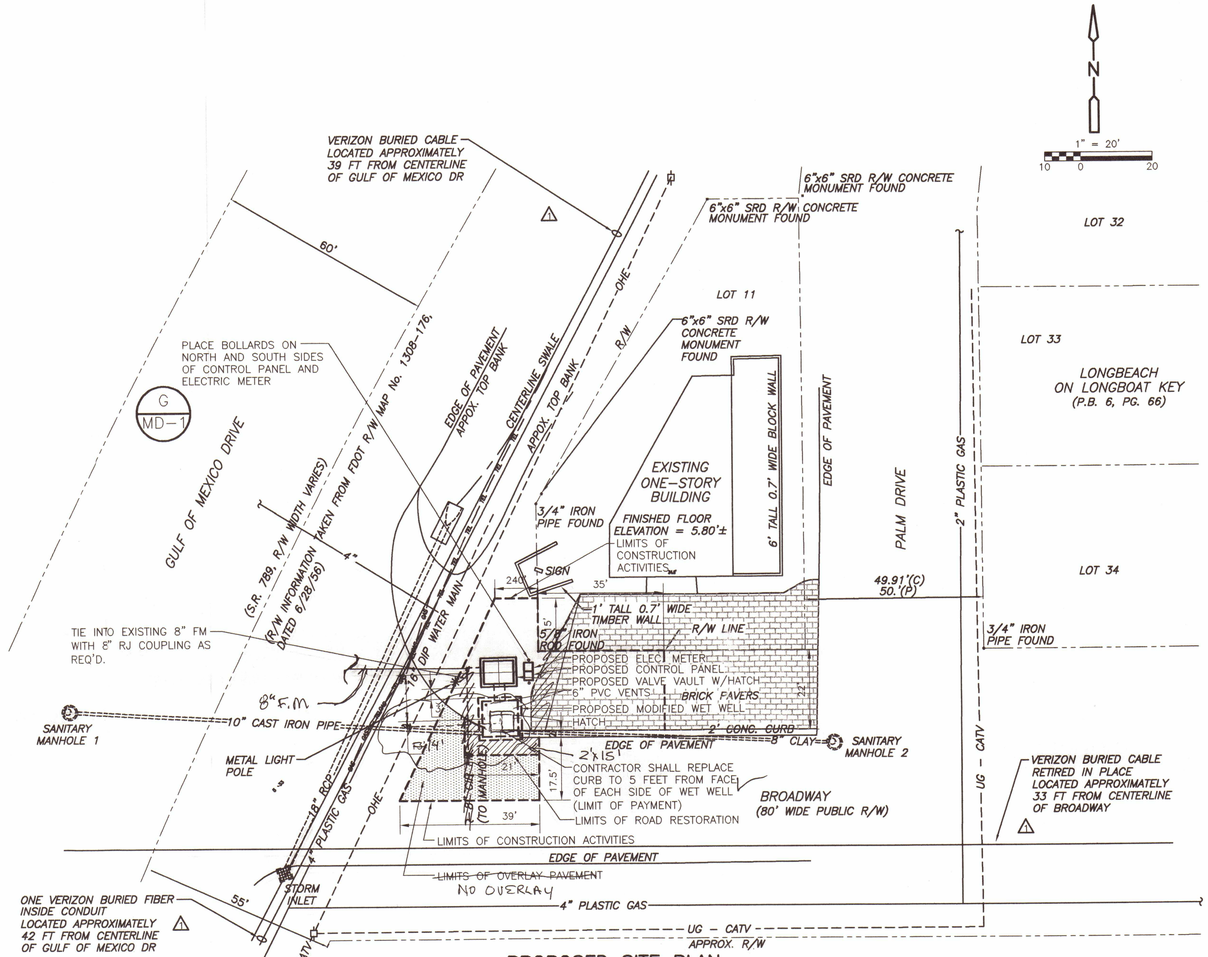

PROPOSED SITE PLAN

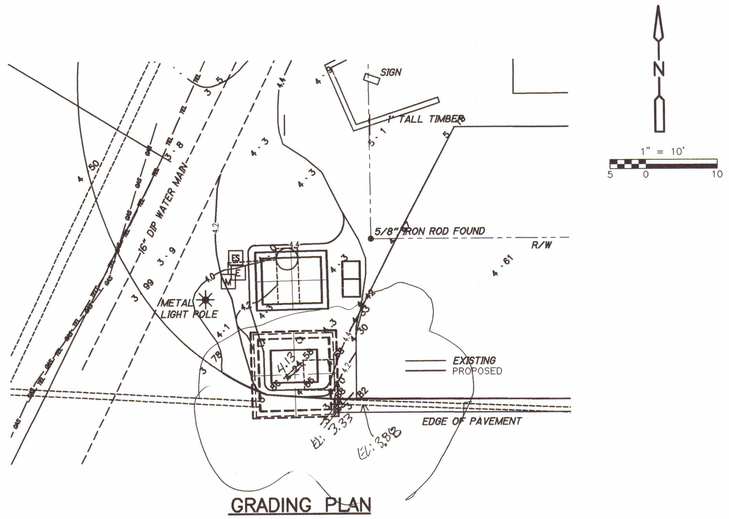

GRADING PLAN

TLC Diversified, Inc.
APPROVED
Date 5-7-04 By

NOTES:

1. TWO BURIED TELEPHONE LINES RUNNING EAST/WEST LOCATED ON BROADWAY NORTH RIGHT-OF-WAY. ONE IS LIVE 50 PAIR CABLE AND ONE IS ABANDONED IN PLACE. VERIZON DOES NOT HAVE LOCATION VERIFICATION. CONTRACTOR TO FIELD LOCATE.
2. 8" CAST IRON FORCE MAIN LOCATION SHOWN AS APPROXIMATE FROM TOWN OF LONGBOAT KEY WASTEWATER SYSTEM DRAWINGS, 1975. CONTRACTOR TO FIELD LOCATE AND VERIFY.
3. TOWN TO INSTALL WATER SERVICE/HOSE BIB. CONTRACTOR TO COORDINATE WITH TOWN.
4. CONTRACTOR TO PROTECT BRICK PAVERS AND RESTORE TO PRE-CONSTRUCTION CONDITION.
5. NO STOCKPILING OF MATERIAL IN ROADWAYS OR FDOT RIGHT-OF-WAY. ALL DIRT AND DEBRIS SHALL BE REMOVED FROM JOB SITE DAILY. ROADS AND SIDEWALK TO BE SWEPT DAILY AS PART OF DAILY CLEANUP.
6. CONSTRUCTION STAGING AND PARKING AREA PROVIDED ACROSS GULF OF MEXICO DRIVE AT THE BROADWAY BEACH ACCESS AREA.
7. CONTRACTOR TO SEE SECTION 01014 – CONSTRUCTION RESTRAINTS.
8. CONTRACTOR SHOULD LIMIT CONSTRUCTION TO BOUNDARIES SHOWN.
9. MAINTENANCE OF TRAFFIC, SIGNS AND BARRICADES TO BE ACCORDING TO FDOT MANUAL OF SAFE PRACTICES, REFERENCE FDOT STANDARDS INDEXES NO. 611 AND NO. 621. CONTRACTOR MUST SUBMIT MOT, WITH ANY MODIFICATIONS TO THE OWNER AND FDOT FOR APPROVAL.
10. FP&L PLANS TO RELOCATE ELECTRIC POLE LOCATED ON SOUTHEAST CORNER OF GULF OF MEXICO DRIVE AND BROADWAY. CONTRACTOR TO CONFIRM LOCATION IN THE FIELD.

CONFORMED DRAWINGS
NOVEMBER 2003

ANNE L. ROSS
P.E. NO. 56976
11/18/03

REV. NO.	DATE	DRWN	CHKD	REMARKS
	11/03	JAS	WMS	CONFORMED DRAWINGS
1	9/03	JAS	WMS	ADDENDUM NO. 1

DESIGNED BY: W. SPRIGGS
DRAWN BY: J. SANCIMINO
SHEET CHK'D BY: A. ROSS
CROSS CHK'D BY: G. CASHON
APPROVED BY: A. ROSS
DATE: AUGUST 2003

CDM Camp Dresser & McKee Inc.
consulting engineering construction operations
1819 Main Street, Suite 1002
Sarasota, Florida 34236
Tel: 941-363-9696
FL Cert. of Authorization No. 20

TOWN OF LONGBOAT KEY, FLORIDA

LIFT STATION A IMPROVEMENTS

SITE PLANS

JAN 9 2004

PROJECT NO. 2790-38413
FILE NAME: CSTPL001.dwg

SHEET NO.
C-1
APPLICANT

P:\2790\38413\Conformed\Civil\ CSTPL001 11/03/03 14:58:08 3:53/06 sancimino/a

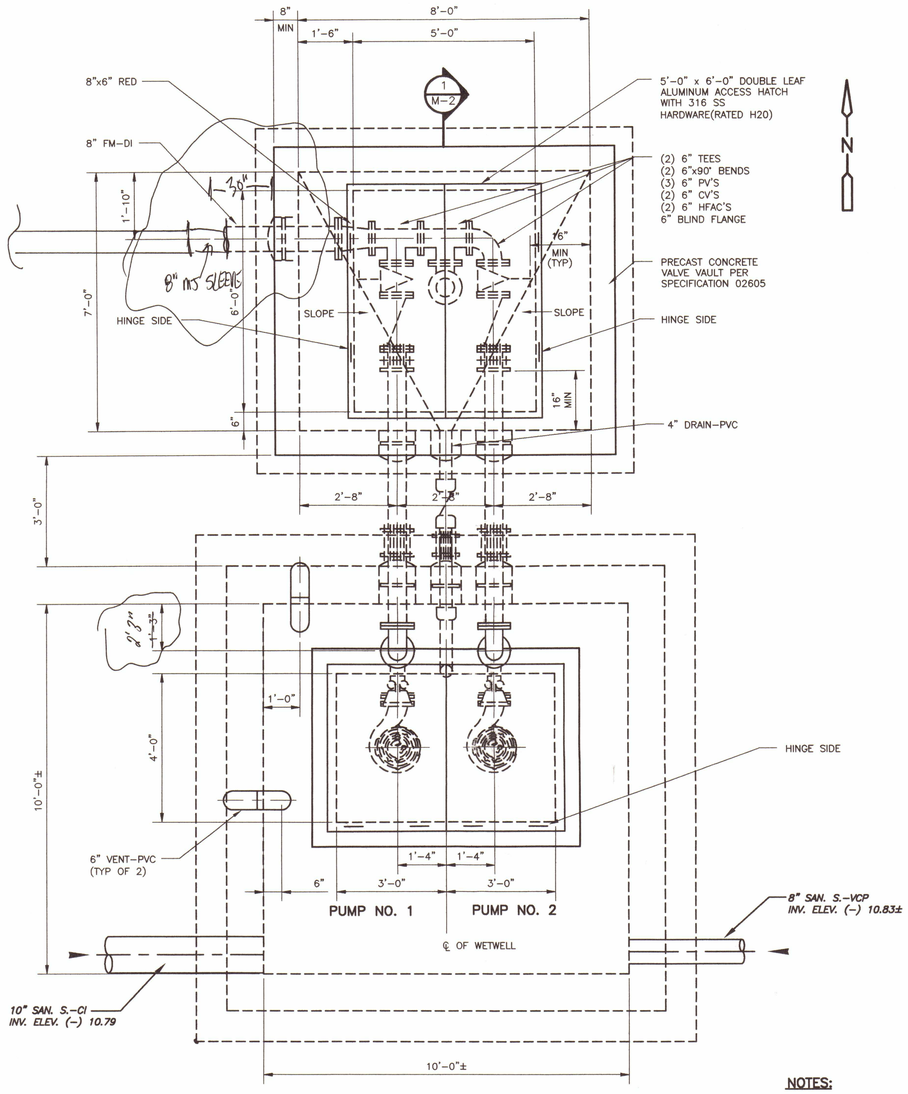

PLAN
1/2" = 1'-0"

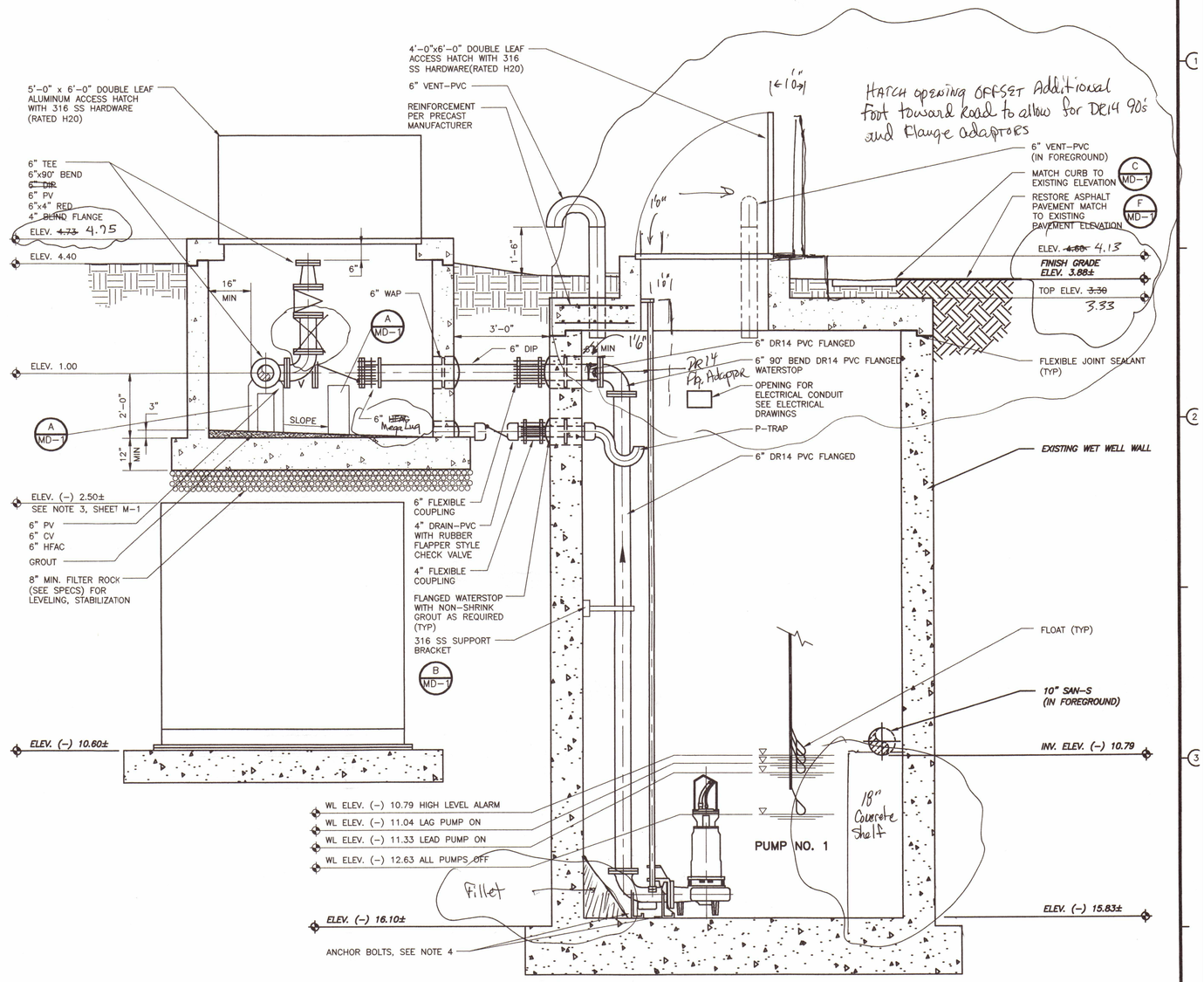

SECTION 1 / M-2
1/2" = 1'-0"

NOTES:

1. THE WALLS OF THE WETWELL SHALL BE BLAST CLEANED, REMOVING ALL GREASE, DIRT AND ALL OTHER CONTAMINATES THAT MAY INHIBIT BONDING. ALL LOOSE AND DETERIORATED CONCRETE SHALL BE REMOVED TO SOUND CONCRETE. RESTORE ALL CONCRETE TO ORIGINAL THICKNESS USING A FAST SETTING, HIGH EARLY STRENGTH , PORTLAND CEMENT BASED RESURFACING MATERIAL. REFER TO SPECIFICATION NO. 03180 AND NO. 03700.
2. REFER TO SPECIFICATION NO. 02605 FOR PRECAST STRUCTURES.
3. ALL PUMPING STATION WORK SHALL CONFORM TO THE REQUIREMENTS TO THE APPROPRIATE SECTIONS OF THE SPECIFICATIONS.
4. ALL EQUIPMENT, ANCHOR BOLT SIZES, LOCATIONS, CLEARANCES, ETC., SHALL BE IN CONFORMANCE WITH THE MANUFACTURER'S RECOMMENDATIONS AND THE APPROVED SHOP DRAWINGS.
5. PUMP ACCESS HATCH CONFIGURATION AND DIMENSIONS SHALL BE CONFIRMED WITH EQUIPMENT SUPPLIER. DIMENSIONS SHOWN ARE MINIMUM VALUES ONLY. HATCH TO BE H20 RATED.
6. WET WELL TOP SLAB AND VALVE VAULT SHALL BE PRE-CAST REINFORCED CONCRETE.
7. SMITH BLAIR (TYPE 913) OR DRESSER (STYLE 127) OR EQUAL CI FLANGED ADAPTER COUPLING AND HARNESSED WITH A MINIMUM OF TWO ¾" 316 SS TIE RODS.
8. SEE ELECTRICAL SHEETS FOR LOCATION OF CONTROL PANEL AND CONNECTING CONDUITS.
9. TYPE 316 STAINLESS STEEL SHALL BE USED INSIDE AND OUTSIDE OF WET WELL AND VALVE VAULT FOR FLANGE NUTS, BRACKETS, GUIDE RAILS AND ALL OTHER HARDWARE EXCEPT AS OTHERWISE SPECIFIED.

TLC Diversified, Inc.
APPROVED
Date 5-7-04 By

CONFORMED DRAWINGS
NOVEMBER 2003

ANNE L. ROSS
P.E. NO. 56976
11/18/03

REV. NO.	DATE	DRWN	CHKD	REMARKS
	11/03	JAS	WMS	CONFORMED DRAWINGS

DESIGNED BY: W. SPRIGGS
DRAWN BY: J. SANCIMINO
SHEET CHK'D BY: A. ROSS
CROSS CHK'D BY: G. CASHON
APPROVED BY: A. ROSS
DATE: AUGUST 2003

CDM Camp Dresser & McKee Inc.
consulting engineering construction operations
1819 Main Street, Suite 1002
Sarasota, Florida 34236
Tel: 941-363-9696
FL Cert. of Authorization No. 20

TOWN OF LONGBOAT KEY, FLORIDA

LIFT STATION A IMPROVEMENTS

LIFT STATION A MODIFICATION
PLAN AND SECTION

JAN 9 2004

PROJECT NO. 2790-38413
FILE NAME: MLSMPM02.dwg

SHEET NO.
M-2

APPLICANT

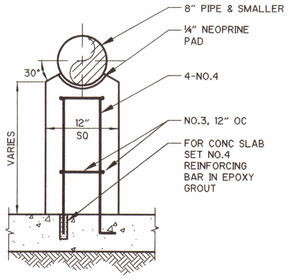

8" PIPE OR SMALLER

DETAIL A (M-2)
NTS

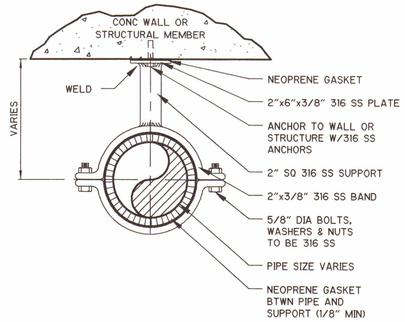

DETAIL B (M-2)
NTS

NOTES

1. USE WASHERS WITH NUTS AND BOLTS.
2. ALL ANCHORS, FASTENERS, BOLTS, NUTS, WASHERS, SCREWS, ETC. SHALL BE 316 STAINLESS STEEL.
3. DETAILS SHOWN ARE INTENDED TO COVER A WIDE RANGE OF PROJECT SITUATIONS. ALL DETAILS MAY NOT APPLY TO THIS PROJECT.

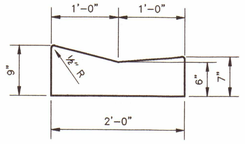

MIAMI CURB AND GUTTER

DETAIL C
NTS

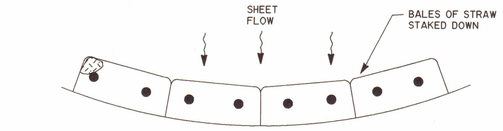

SINGLE ROW OF BALES OF STRAW TO BE PLACED PRIOR TO THE START OF ROUGH GRADING

PLAN
NTS

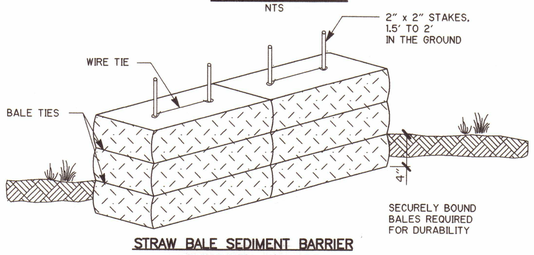

STRAW BALE SEDIMENT BARRIER
DOT INDEX NO. 102

DETAIL D
NTS

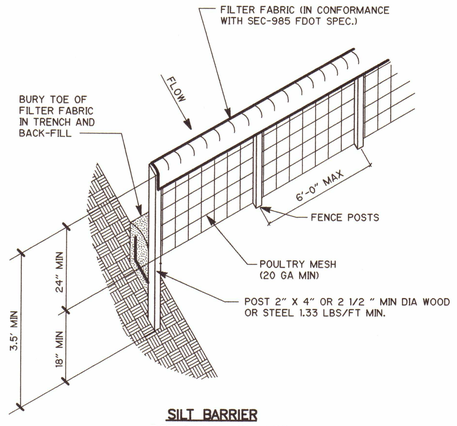

SILT BARRIER
DOT INDEX NO. 102

DETAIL E
NTS

NOTE TO CONTRACTOR: EROSION CONTROL MEASURES

REQUIRED EROSION CONTROL MEASURES MUST REMAIN INTACT THROUGHOUT CONSTRUCTION. FAILURE TO INSTALL OR PROPERLY MAINTAIN THESE BARRICADES WILL RESULT IN ENFORCEMENT ACTION WHICH MAY INCLUDE CITATIONS, AS PROVIDED BY ORDINANCE 90-17, AND CHAPTER 40D-4 AND 40D-40, F.A.C. INITIATION OF CIVIL PENALTY PROCEDURES PURSUANT TO SECTION 373.129 F.A.C., CAN RESULT IN A PENALTY NOT TO EXCEED $10,000 PER OFFENSE WITH EACH DATE DURING WHICH SUCH VIOLATION OCCURS CONSTITUTING A SEPARATE OFFENSE.

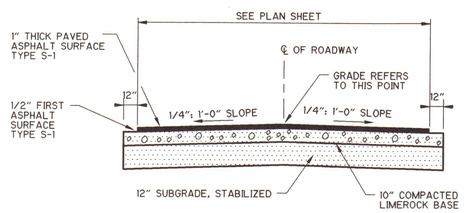

NOTE:

SEE PLAN FOR ROADWAY LOCATIONS. BASE COMPACTION TO A MINIMUM OF 98% MAXIMUM DENSITY AASHTO T-180 METHOD. SUBGRADE STABILIZED PER FDOT STANDARD SPECIFICATIONS FOR ROAD AND BRIDGE CONSTRUCTION.

TYPICAL ROADWAY DETAIL

DETAIL F
NTS

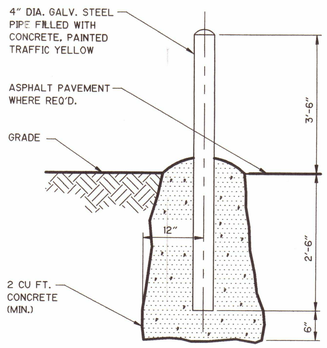

GUARD POST

DETAIL G
NTS

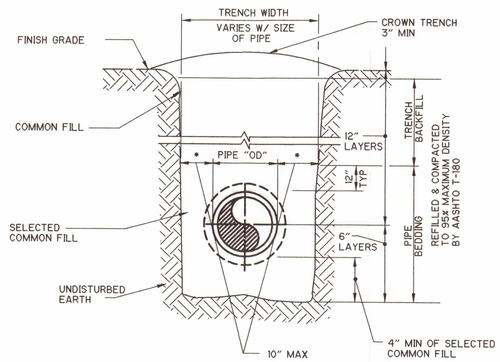

UNIMPROVED SURFACE
TYPE A-1 PIPE BEDDING

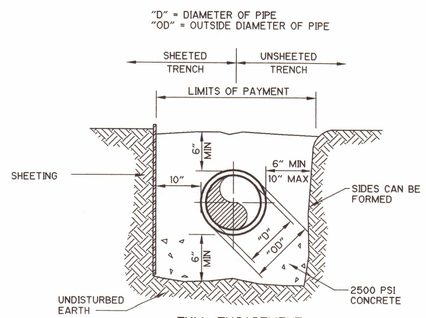

FULL ENCASEMENT

CONFORMED DRAWINGS
NOVEMBER 2003

ANNE L. ROSS
P.E. NO. 56976
11/12/03

REV. NO.	DATE	DRWN	CHKD	REMARKS
	11/03	JAS	WMS	CONFORMED DRAWINGS

DESIGNED BY: W. SPRIGGS
DRAWN BY: J. SANCIMINO
SHEET CHK'D BY: A. ROSS
CROSS CHK'D BY: G. CASHON
APPROVED BY: A. ROSS
DATE: AUGUST 2003

CDM Camp Dresser & McKee Inc.
consulting engineering construction operations
1819 Main Street, Suite 1002
Sarasota, Florida 34236
Tel: 941-363-9696
FL Cert. of Authorization No. 20

TOWN OF LONGBOAT KEY, FLORIDA

LIFT STATION A IMPROVEMENTS

MISCELLANEOUS DETAILS

RECEIVED JAN 9 2004

PROJECT NO. 2790-38413
FILE NAME: MSDDTMD1.dwg

SHEET NO.
MD-1

APPLICANT

P:\2790\38413\Conformed\Mech\D46SDDTMD1 11/03/03 14:46:42 12:37:26 sancimino/jo

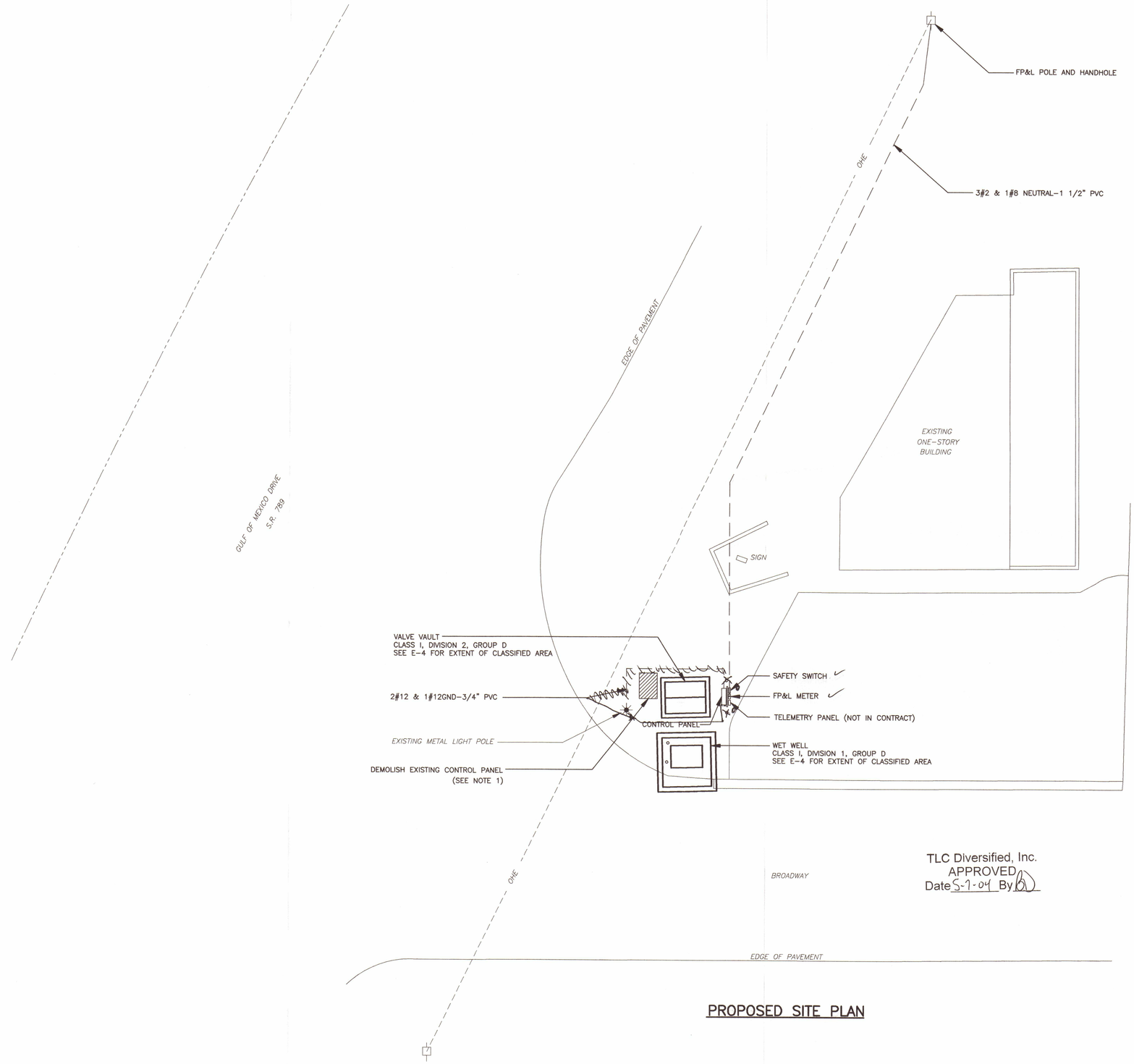

N

SCALE: 3/32"=1'-0"
10 8 6 4 2 0 11'

TLC Diversified, Inc.
APPROVED
Date 5-7-04 By

NOTE:
1. CONTRACTOR TO DEMOLISH EXISTING ELECTRIC CABLE AND CONDUIT FROM FP&L POLE TO EXISTING CONTROL PANEL.
2. CONTRACTOR TO COORDINATE WITH SHANON WRIGHT AT FP&L, (941) 927-4216.

PROPOSED SITE PLAN

CONFORMED DRAWINGS
NOVEMBER 2003

Charles S. Stein
11/17/2003
CHARLES S. STEIN
P.E. NO. 39324

CHARLES S. STEIN, P.E.
Florida P.E. #39324
23055 Post Gardens Way, #133
Boca Raton, Florida 33433
(561) 392-5346 - SteinCS@aol.com
www.gladespower.com

REV. NO.	DATE	DRWN	CHKD	REMARKS

DESIGNED BY: C. STEIN
DRAWN BY: C. STEIN
SHEET CHK'D BY: P. LEFAVE
CROSS CHK'D BY: A. ROSS
APPROVED BY: C. STEIN
DATE: AUGUST 2003

CDM Camp Dresser & McKee Inc.
consulting engineering construction operations
1819 Main Street, Suite 1002
Sarasota, Florida 34236
Tel: 941-363-9696
FL Cert. of Authorization No. 20

TOWN OF LONGBOAT KEY, FLORIDA

LIFT STATION A IMPROVEMENTS

ELECTRICAL SITE PLAN

JAN 9 2004

PROJECT NO. 2790-38413
FILE NAME: E01.dwg

SHEET NO.
E-1

APPLICANT

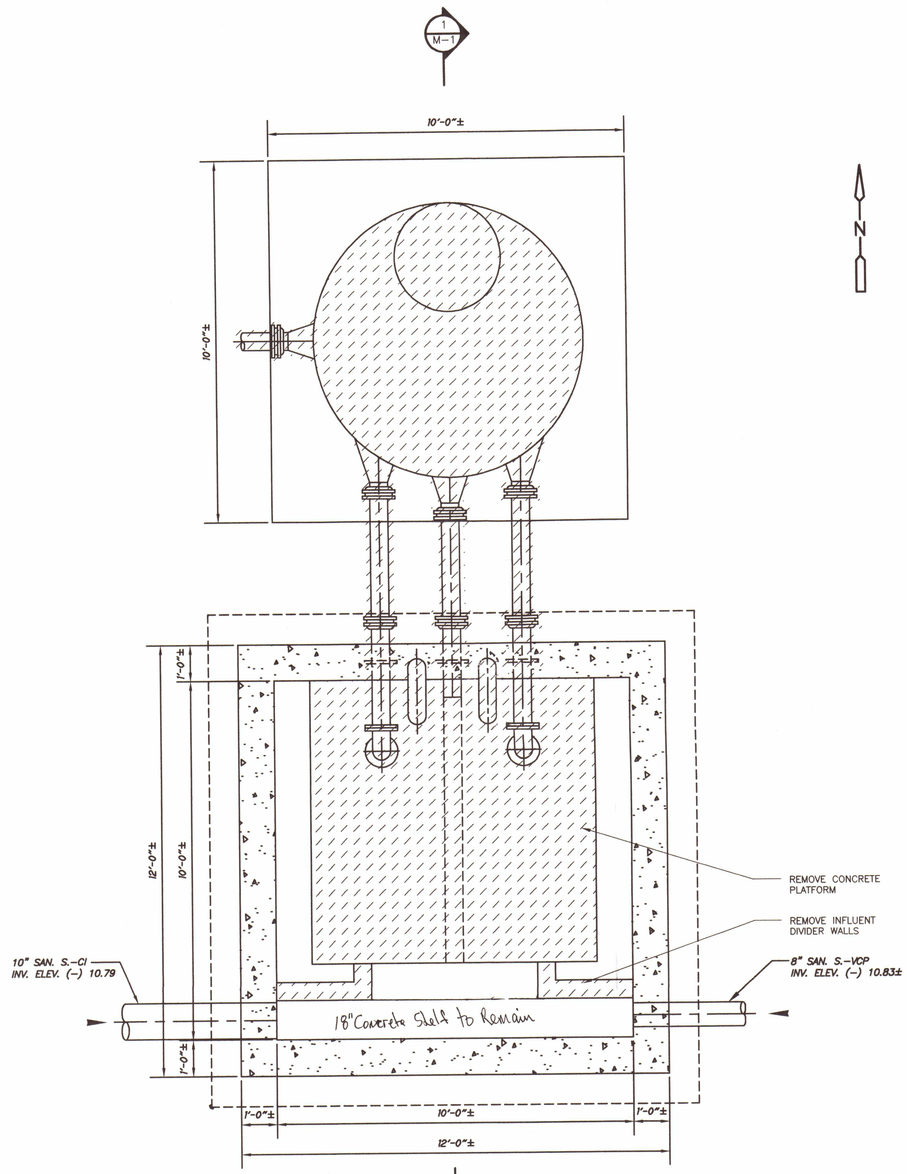

PLAN
1/2" = 1'-0"

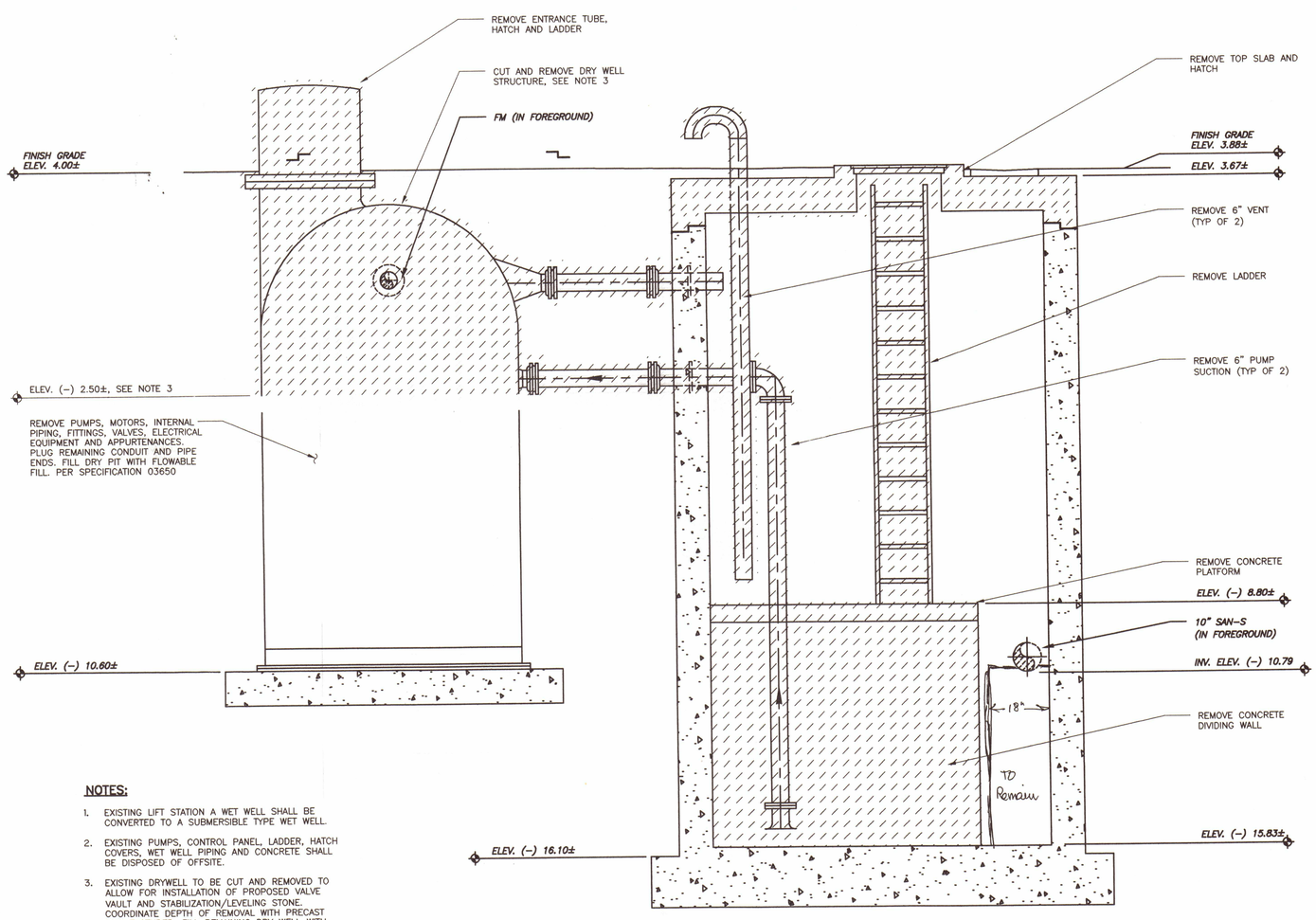

SECTION 1 / M-1
1/2" = 1'-0"

NOTES:

1. EXISTING LIFT STATION A WET WELL SHALL BE CONVERTED TO A SUBMERSIBLE TYPE WET WELL.
2. EXISTING PUMPS, CONTROL PANEL, LADDER, HATCH COVERS, WET WELL PIPING AND CONCRETE SHALL BE DISPOSED OF OFFSITE.
3. EXISTING DRYWELL TO BE CUT AND REMOVED TO ALLOW FOR INSTALLATION OF PROPOSED VALVE VAULT AND STABILIZATION/LEVELING STONE. COORDINATE DEPTH OF REMOVAL WITH PRECAST MANUFACTURER. FILL REMAINING DRY WELL WITH CONCRETE/FLOWABLE FILL.
4. DIMENSIONS, LOCATION AND ELEVATIONS OF THE DRY WELL ARE PRESENTED AS ON TOWN OF LONGBOAT KEY WASTEWATER SYSTEM DRAWINGS, 1975. CONTRACTOR TO FIELD VERIFY.
5. DIMENSIONS FOR THE WET WELL ARE PRESENTED AS ON TOWN OF LONGBOAT KEY WASTEWATER SYSTEM DRAWINGS, 1975. CONTRACTOR TO FIELD VERIFY.
6. EXISTING PIPING PENETRATIONS SHALL BE FILLED WITH NON-SHRINK GROUT PER SPECIFICATIONS.
7. EXISTING DRYWELL IS PRE-FABRICATED FACTORY BUILT. CONSTRUCTION MATERIAL IS FIBERGLASS.
8. CONTRACTOR TO RELOCATE SUITABLE SURPLUS SOIL MATERIAL TO OWNER PROPERTY AT 280 GULF OF MEXICO DRIVE.

CONFORMED DRAWINGS
NOVEMBER 2003

ANNE L. ROSS
P.E. NO. 56976
11/18/03

REV. NO.	DATE	DRWN	CHKD	REMARKS
	11/03	JAS	WMS	CONFORMED DRAWINGS

DESIGNED BY: W. SPRIGGS
DRAWN BY: J. SANCIMINO
SHEET CHK'D BY: A. ROSS
CROSS CHK'D BY: G. CASHON
APPROVED BY: A. ROSS
DATE: AUGUST 2003

CDM Camp Dresser & McKee Inc.
consulting engineering construction operations
1819 Main Street, Suite 1002
Sarasota, Florida 34236
Tel: 941-363-9696
FL Cert. of Authorization No. 20

TOWN OF LONGBOAT KEY, FLORIDA

LIFT STATION A IMPROVEMENTS

LIFT STATION A DEMOLITION
PLAN AND SECTION

JAN 9 2004

PROJECT NO. 2790-38413
FILE NAME: MLSDPM01.dwg

SHEET NO.
M-1

APPLICANT

P:\2790_38413\Conformed\Mech\ MLSDPM01 11/03/03 14:43:43 9:53:15 sancimino/ja

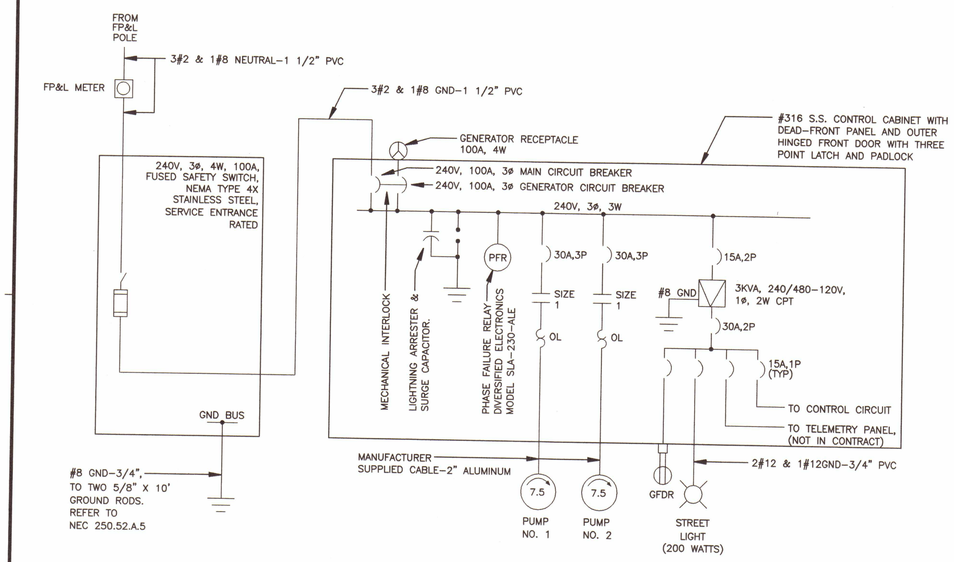

POWER DIAGRAM

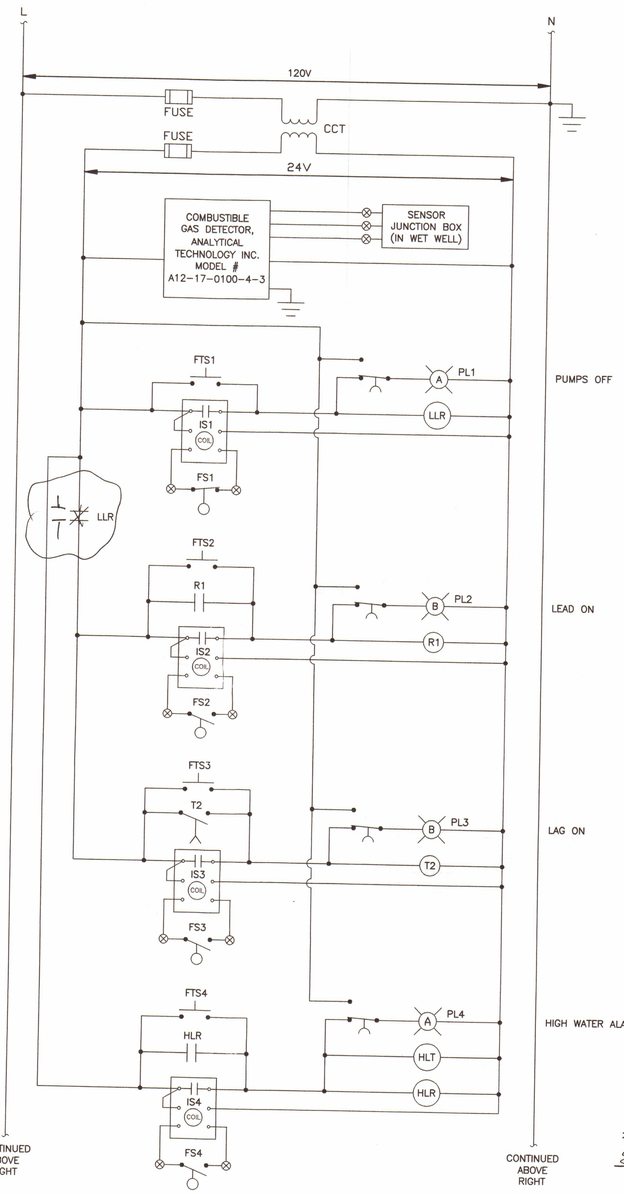

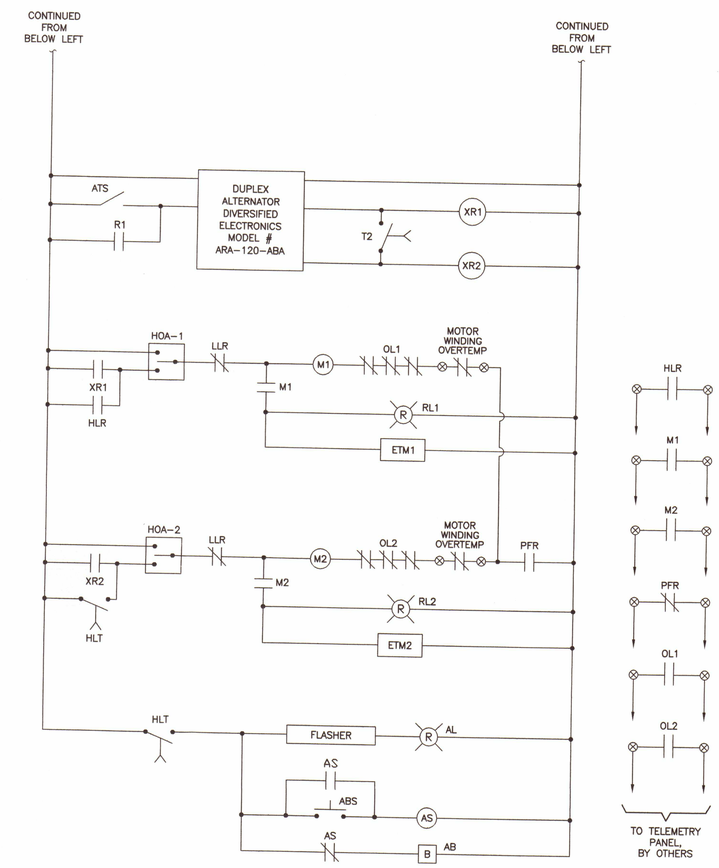

~~Built as Shown~~
Refer to O&Ms

SYMBOLS, CONTROL DIAGRAM

- XR1 — RELAY COIL
- NORMALLY OPEN CONTACT
- NORMALLY CLOSED CONTACT
- TIME DELAY RELAY CONTACT, TIME TO CLOSE
- FLOAT SWITCH, OPENS ON RISING LEVEL
- FLOAT SWITCH, CLOSES ON RISING LEVEL
- B — INDICATING LIGHT. COLOR CODES ARE:
  - A – AMBER
  - B – BLUE
  - R – RED
- MAINTAINED CONTACT SWITCH, SPST
- MOMENTARY CONTACT SWITCH, SPST
- MOMENTARY CONTACT SWITCH, SPDT
- HAND–OFF–AUTO SELECTOR SWITCH
- M1 — MOTOR CONTACTOR
- OL1 — OVERLOAD RELAYS

FRONT VIEW ABBREVIATIONS

AB – ALARM BELL (120V)
ABS – ALARM BELL SILENCER
AL – ALARM LIGHT (120V)
AL1 – ALTERNATOR
AS – ALARM RELAY (120V)
ATS – ALTERNATOR TEST SWITCH
CB1 – PUMP NO. 1 CIRCUIT BREAKER
CB2 – PUMP NO. 2 CIRCUIT BREAKER
CB3 – CPT PRIMARY SIDE CIRCUIT BREAKER
CB4 – CPT SECONDARY SIDE CIRCUIT BREAKER
CB5 – 120V CONTROL CIRCUIT BREAKER
CB6 – DUPLEX RECEPTACLE CIRCUIT BREAKER
CB7 – INSTRUMENT PANEL CIRCUIT BREAKER
CB8 – LIGHT POLE CIRCUIT BREAKER
CCT – CONTROL POWER TRANSFORMER (120V–24V)
CPT – CONTROL POWER TRANSFORMER (230V–120V)
ETM – ELAPSED TIME METER (120V)
FB – FUSE BLOCK
FL – FLASHER (110V SOLID STATE)
FS – FLOAT SWITCH
FTS – FLOAT TEST SWITCH
GCB – GENERATOR CIRCUIT BREAKER (INTERLOCKED WITH MCB)
GFDR – GROUND FAULT DUPLEX RECEPTACLE
GR – GENERATOR RECEPTACLE
GRD – GROUND LUGS
HLR – HIGH LEVEL RELAY (24V)
HLT – HIGH LEVEL TIME DELAY RELAY (24V)
HOA – HAND–OFF–AUTO SWITCH
IS – INTRINSICALLY SAFE RELAYS
LA – LIGHTNING ARRESTOR
LLR – LOW LEVEL RELAY (24V)
M1 – PUMP NO. 1 MOTOR STARTER
M2 – PUMP NO. 2 MOTOR STARTER
MCB – MAIN CIRCUIT BREAKER
NB – NEUTRAL BLOCK
OL1 – PUMP NO. 1 SOLID STATE OVERLOAD UNIT
OL2 – PUMP NO. 2 SOLID STATE OVERLOAD UNIT
PDB – POWER DISTRIBUTION BLOCK
PFR – PHASE FAILURE RELAY (230V)
PL – LEVEL INDICATORS (PUSH–TO–TEST) (24V)
R – PUMP RUN INDICATORS (PUSH–TO–TEST) (120V)
R1 – LEAD PUMP CALL RELAY (24V)
SS – STAINLESS STEEL
TB – TERMINAL BLOCKS
T2 – LAG PUMP CALL TIME DELAY RELAY (24V)
XR1 – PUMP NO. 1 CALL RELAY (120V)
XR2 – PUMPS NO. 2 CALL RELAY (120V)

CONTROL CIRCUIT DIAGRAM

CHARLES S. STEIN, P.E.
Florida P.E. #39324
23055 Post Gardens Way, #133
Boca Raton, Florida 33433
(561) 392-5346 - SteinCS@aol.com
www.gladespower.com

CONFORMED DRAWINGS
NOVEMBER 2003

Charles S. Stein
11/17/2003
CHARLES S. STEIN
P.E. NO. 39324

REV. NO.	DATE	DRWN	CHKD	REMARKS

DESIGNED BY: C. STEIN
DRAWN BY: C. STEIN
SHEET CHK'D BY: P. LEFAVE
CROSS CHK'D BY: A. ROSS
APPROVED BY: C. STEIN
DATE: AUGUST 2003

CDM Camp Dresser & McKee Inc.
consulting engineering construction operations
1819 Main Street, Suite 1002
Sarasota, Florida 34236
Tel: 941-363-9696
FL Cert. of Authorization No. 20

TOWN OF LONGBOAT KEY, FLORIDA

LIFT STATION A IMPROVEMENTS

POWER AND CONTROL DIAGRAMS

JAN 9 2004

PROJECT NO. 2790–38413
FILE NAME: E02.dwg

SHEET NO.
E-2

APPLICANT

FRONT VIEW ABBREVIATIONS

AB – ALARM BELL (120V)
ABS – ALARM BELL SILENCER
AL – ALARM LIGHT (120V)
ALT – ALTERNATOR
AS – ALARM RELAY (120V)
ATS – ALTERNATOR TEST SWITCH
CB1 – PUMP NO. 1 CIRCUIT BREAKER
CB2 – PUMP NO. 2 CIRCUIT BREAKER
CB3 – CPT PRIMARY SIDE CIRCUIT BREAKER
CB4 – CPT SECONDARY SIDE CIRCUIT BREAKER
CB5 – 120V CONTROL CIRCUIT BREAKER
CB6 – DUPLEX RECEPTACLE CIRCUIT BREAKER
CB7 – INSTRUMENT PANEL CIRCUIT BREAKER
CB8 – LIGHT POLE CIRCUIT BREAKER
CCT – CONTROL POWER TRANSFORMER (120V–24V)
CGD – COMBUSTIBLE GAS DETECTOR
CPT – CONTROL POWER TRANSFORMER (230V–120V)
ETM – ELAPSED TIME METER (120V)
FB – FUSE BLOCK
FL – FLASHER (110V SOLID STATE)
FS – FLOAT SWITCH
FTS – FLOAT TEST SWITCH
GCB – GENERATOR CIRCUIT BREAKER (INTERLOCKED WITH MCB)
GFDR – GROUND FAULT DUPLEX RECEPTACLE
GR – GENERATOR RECEPTACLE
GRD – GROUND LUGS
HLR – HIGH LEVEL RELAY (24V)
HLT – HIGH LEVEL TIME DELAY RELAY (24V)
HOA – HAND–OFF–AUTO SWITCH
IS – INTRINSICALLY SAFE RELAYS
LA – LIGHTNING ARRESTOR
LLR – LOW LEVEL RELAY (24V)
M1 – PUMP NO. 1 MOTOR STARTER
M2 – PUMP NO. 2 MOTOR STARTER
MCB – MAIN CIRCUIT BREAKER
NB – NEUTRAL BLOCK
OL1 – PUMP NO. 1 SOLID STATE OVERLOAD UNIT
OL2 – PUMP NO. 2 SOLID STATE OVERLOAD UNIT
PDB – POWER DISTRIBUTION BLOCK
PFR – PHASE FAILURE RELAY (230V)
PL – LEVEL INDICATORS (PUSH–TO–TEST) (24V)
RL – PUMP RUN INDICATORS (PUSH–TO–TEST) (120V)
R1 – LEAD PUMP CALL RELAY (24V)
SS – STAINLESS STEEL
TB – TERMINAL BLOCKS
T2 – LAG PUMP CALL TIME DELAY RELAY (24V)
XR1 – PUMP NO. 1 CALL RELAY (120V)
XR2 – PUMPS NO. 2 CALL RELAY (120V)

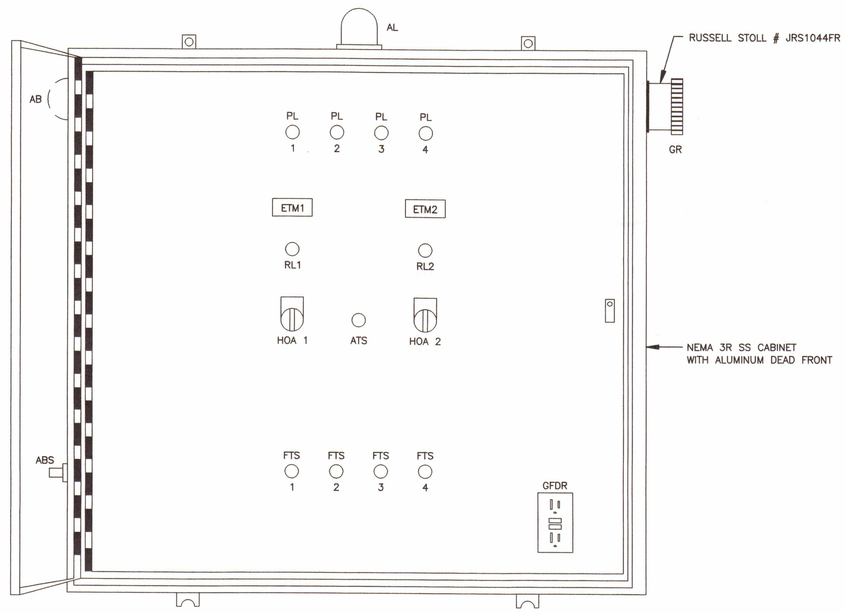

CONTROL PANEL – FRONT VIEW

N.T.S.

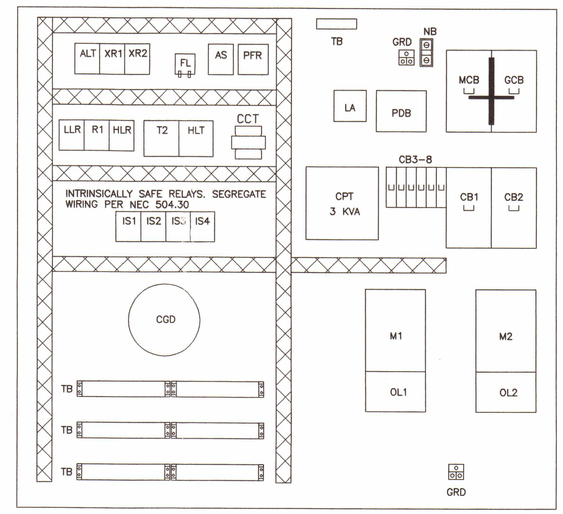

CONTROL PANEL – BACKPLATE LAYOUT

N.T.S.

Built as Shown
Refer to O & M's

CHARLES S. STEIN, P.E.
Florida P.E. #39324
23055 Post Gardens Way, #133
Boca Raton, Florida 33433
(561) 392-5346 - SteinCS@aol.com
www.gladespower.com

CONFORMED DRAWINGS
NOVEMBER 2003

Charles S. Stein
11/17/2003
CHARLES S. STEIN
P.E. NO. 39324

REV. NO.	DATE	DRWN	CHKD	REMARKS

DESIGNED BY: C. STEIN
DRAWN BY: C. STEIN
SHEET CHK'D BY: P. LEFAVE
CROSS CHK'D BY: A. ROSS
APPROVED BY: C. STEIN
DATE: AUGUST 2003

CDM Camp Dresser & McKee Inc.
consulting engineering construction operations
1819 Main Street, Suite 1002
Sarasota, Florida 34236
Tel. 941-363-9696
FL Cert. of Authorization No. 20

TOWN OF LONGBOAT KEY, FLORIDA

LIFT STATION A IMPROVEMENTS

ELECTRICAL LAYOUT

JAN 9 2004

PROJECT NO. 2790–38413
FILE NAME: E03.dwg

SHEET NO.
E-3

APPLICANT

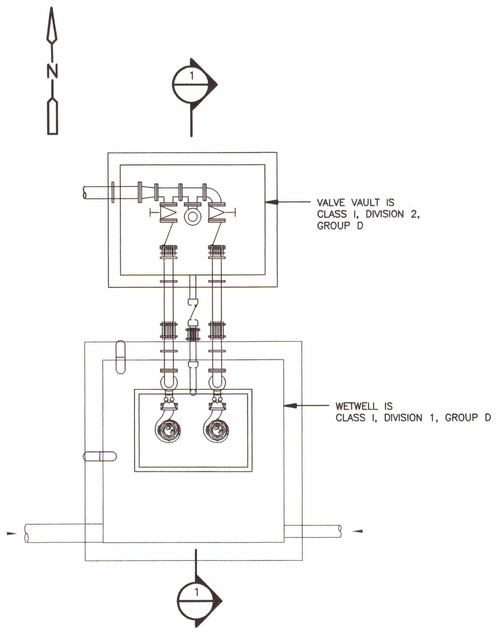

WETWELL AND VALVE VAULT PLAN

N.T.S.

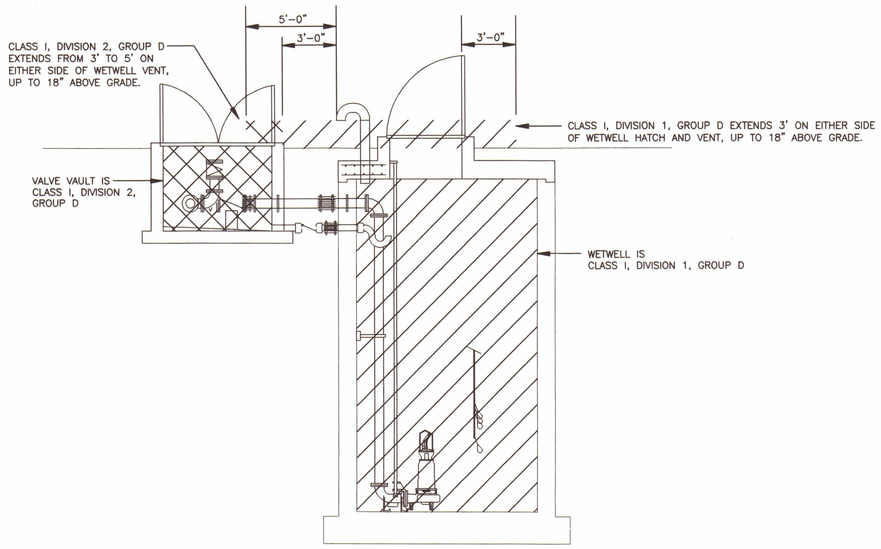

SECTION 1 – WETWELL AND VALVE VAULT

N.T.S.

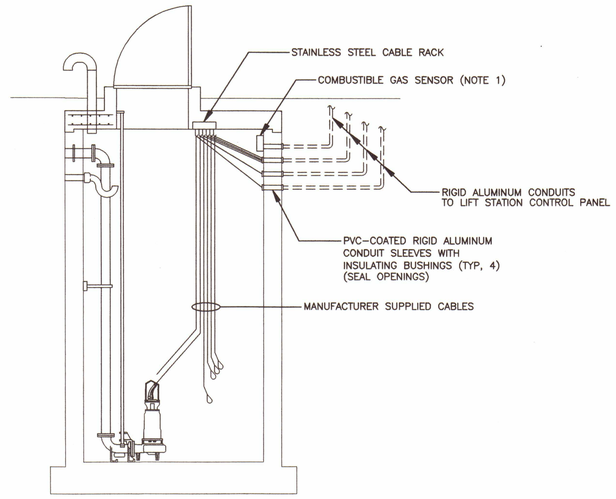

DETAIL A – WETWELL WIRING

N.T.S.

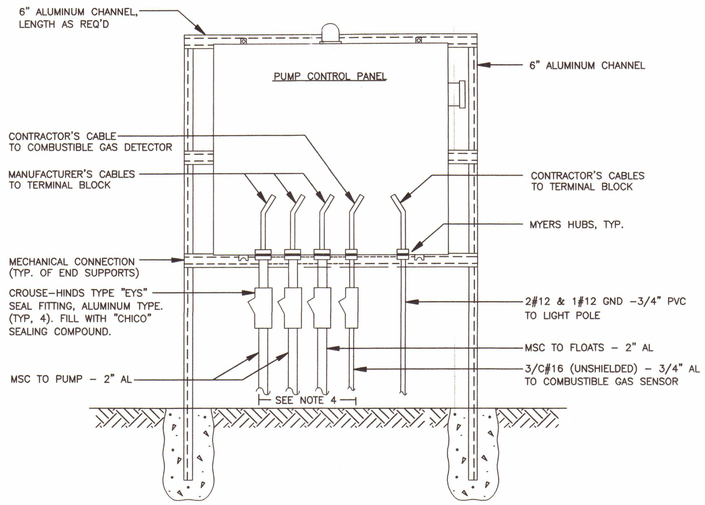

EQUIPMENT RACK & CONDUIT DETAIL (FRONT)

N.T.S.

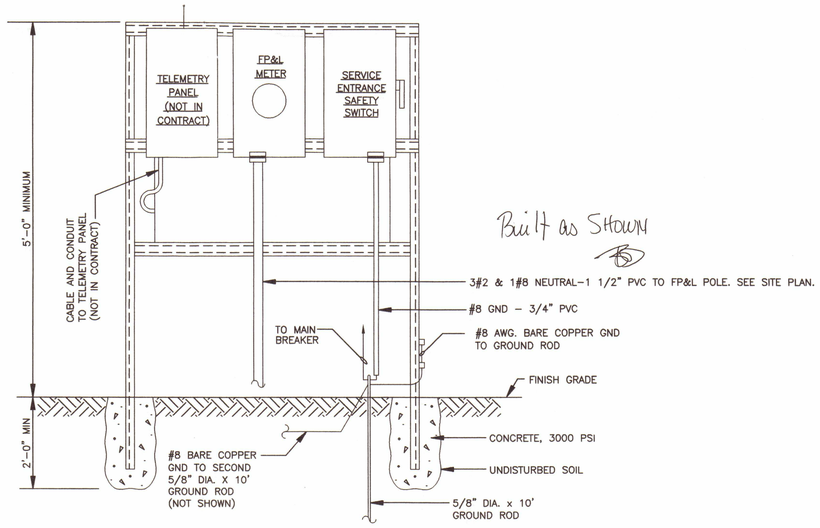

EQUIPMENT RACK & CONDUIT DETAIL (REAR)

N.T.S.

ABBREVIATIONS

AL – RIGID ALUMINUM CONDUIT
MSC – MANUFACTURER SUPPLIED CABLE
PVC – SCHEDULE 80 PVC CONDUIT

NOTES

1. ROUTE 1/4" PVC FLEX TUBING ADJACENT TO CONDUIT FOR COMBUSTIBLE GAS SENSOR. TUBING IS CALIBRATION GAS FEED. TERMINATE ONE END OF TUBING AT GAS SENSOR. TERMINATE OTHER END AT CONVENIENT LOCATION ON ELECTRICAL EQUIPMENT RACK.
2. CONDUIT FROM FP&L METER TO SAFETY SWITCH IS NOT SHOWN.
3. CONDUIT FROM SAFETY SWITCH TO CONTROL PANEL IS NOT SHOWN.
4. FOR CONTINUATION OF CONDUIT AND WIRING TO WETWELL, SEE DETAIL A, THIS SHEET.

CONFORMED DRAWINGS
NOVEMBER 2003

Charles S. Stein
11/17/2003
CHARLES S. STEIN
P.E. NO. 39324

CHARLES S. STEIN, P.E.
Florida P.E. #39324
23055 Post Gardens Way, #133
Boca Raton, Florida 33433
(561) 392-5346 - SteinCS@aol.com
www.gladespower.com

REV. NO.	DATE	DRWN	CHKD	REMARKS

DESIGNED BY: C. STEIN
DRAWN BY: C. STEIN
SHEET CHK'D BY: P. LEFAVE
CROSS CHK'D BY: A. ROSS
APPROVED BY: C. STEIN
DATE: AUGUST 2003

CDM Camp Dresser & McKee Inc.
consulting engineering construction operations
1819 Main Street, Suite 1002
Sarasota, Florida 34236
Tel: 941-363-9696
FL Cert. of Authorization No. 20

TOWN OF LONGBOAT KEY, FLORIDA

LIFT STATION A IMPROVEMENTS

WETWELL PLAN AND SECTION / EQUIPMENT RACK DETAILS

RECEIVED JAN 9 2004

PROJECT NO. 2790-38413
FILE NAME: E04.dwg

SHEET NO.
E-4
APPLICANT

WASTEWATER SYSTEM IMPROVEMENTS

FOR

TOWN OF LONGBOAT KEY, FLORIDA

APPRVD: _____ DATE: 2/25/04

PERMIT APPROVAL IS CONDITIONED ON FULL COMPLIANCE WHEN FIELD INSPECTED WITH ALL PROVISIONS OF THE CODES OF THE TOWN OF LONGBOAT KEY & ALL OTHER APPLICABLE LAWS. ALL BUILDINGS, A/C, PLUMBING, MECHANICAL, ELECTRICAL, GAS & FIRE INSTALLATIONS SHALL BE MADE BY LICENSED CONTRACTORS &/OR RESIDENTIAL HOMEOWNERS.

BLDG: _____ ELEC: _____
PLUMBING: _____ MECH: _____
GAS: _____ ROOF: _____ FIRE: _____

PERMIT NO.: BP 20714

REVIEWED FOR CODE COMPLIANCE

APPLICANT

LONGBOAT KEY INCORPORATED 1952 FLORIDA

REGISTERED ENGINEERS
STATE OF FLORIDA

PROJECT MANAGER — LAURA S. ANDREWS, P.E., DEE NO. 47683 — 11/18/03

GENERAL, CIVIL, MECHANICAL — ANNE L. ROSS, P.E. NO. 56976 — 11/18/03

ELECTRICAL — CHARLES S. STEIN, P.E. NO. 39324 — 11/17/2003

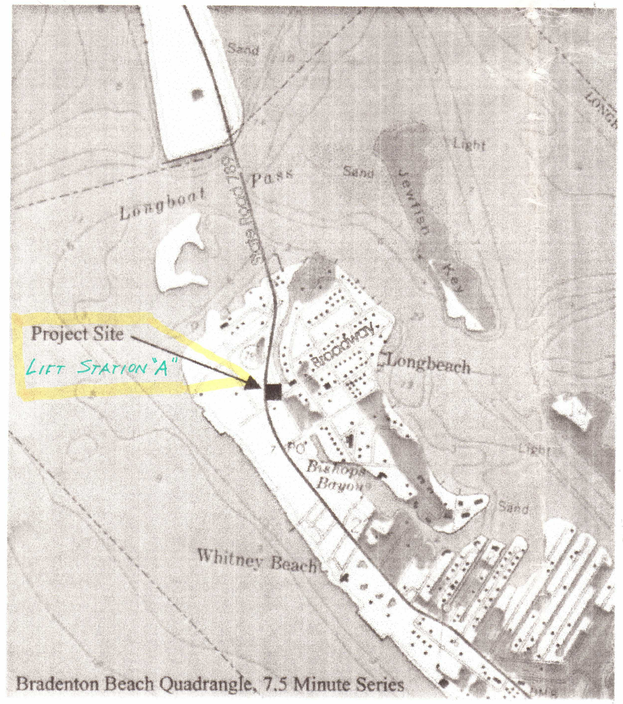

SITE LOCATION MAP
NTS

Record Drawings
LIFT STATION "A"

N

LIFT STATION A IMPROVEMENTS

Record Drawings

August 2003

INDEX OF SHEETS

SHEET	TITLE
GENERAL	
	COVER
G-1	GENERAL NOTES, LEGEND AND ABBREVIATIONS
SP-1	SPECIFIC PURPOSE SURVEY
CIVIL	
C-1	SITE PLANS
MECHANICAL	
M-1	LIFT STATION A DEMOLITION PLAN AND SECTION
M-2	LIFT STATION A MODIFICATION PLAN AND SECTION
MD-1	MISCELLANEOUS DETAILS
ELETRICAL	
E-1	ELECTRICAL SITE PLAN
E-2	POWER AND CONTROL DIAGRAMS
E-3	ELECTRICAL LAYOUT
E-4	WETWELL PLAN AND SECTION/EQUIPMENT RACK DETAILS

CAMP DRESSER & McKEE INC.

1819 MAIN STREET, SUITE 1002
SARASOTA, FLORIDA 34236
TEL: 941-363-9696
FL. CERT. OF AUTHORIZATION NO. 20

PROJECT NUMBER: 2790-38413

CONFORMED DRAWINGS
NOVEMBER 2003

JAN - 9 2004

consulting
engineering
construction
operations

CDM

ABBREVIATIONS

GENERAL	SYMBOLS
ADJUSTABLE	ADJ
ALUMINUM	AL., ALUM.
ANGLE	<.
BARE ROOT	BR
BELOW	BEL
BENCHMARK	BM
BETWEEN	BTWN.
CENTER LINE	℄
CENTER TO CENTER	C.C.
CORRUGATED METAL PIPE	CMP
CONCRETE	CONC
CENTER (ED)	CTR
DEMOLITION	DEMO
DIAMETER	DIA., DIAM.
DIAGONAL	DIAG.
DIMENSION	DIM.
DISCHARGE	DISCH
DRAWING	DWG.
EACH	EA.
ELEVATION	EL., ELEV.
EFFLUENT	EFF.
EDGE OF PAVEMENT	EOP
EXISTING	EXIST.
FURNISHED BY OTHERS	FBO
FINISH	FIN.
FLOOR	FL.
FEET/FOOT	FT
HIGH	H.
HIGH POINT	H.P.
HEIGHT	HT
INFLUENT	INFL.
LONG	LG.
LOW POINT	L.P.
MATERIAL	MTL.
MANUFACTURING	MFG.
MANUFACTURER	MFR.
MAXIMUM	MAX.
MECHANICAL	MECH.
METAL	MET.
MINIMUM	MIN.
MOUNTED	MTD.
MUD VALVE	MV
NATIONAL ELECTRIC CODE	NEC
NOMINAL	NOM.
NOT TO SCALE	N.T.S.
NUMBER	NO.
ON CENTER	O.C.
OPTION	OPT.
OPPOSITE	OPP.
OPENING	OPNG
OR EQUAL	O/E.
OUTSIDE CLEARANCE	O.C.
PERFORATED	PERF
PIECE	PC.
POINT	PT.
POUND(S)	LB(S).
PLATE	PL.
PRECAST	PRCST
PRIMARY EFFLUENT	PEFL
RADIUS	RAD., R.
REINFORCED CONCRETE PIPE	RCP
REQUIRED	REQ'D
RIGHT OF WAY	R/W
ROOM	RM.
SCHEDULE	SCH
SQUARE	SQ.
STAINLESS STEEL	S.S.
SIDEWALK	SDWK.
SHEET	SH., SHT.
SYMMETRICAL	SYMM.
SECTION	SEC.
STANDARD	ST'D
STEEL	STL.
THICK	THK.
TYPICAL	TYP.
TEMPORARY	TEMP.
THREADED	THD.
UTILITY EASEMENT	U.E.
UNDERGROUND ELECTRIC CONDUIT	U.E.C.
VERTICAL	VERT.

GENERAL (CONT.)	SYMBOLS
WATER	WTR.
WATER LEVEL	WL
WATER MAIN	WM
WEATHERPROOF	WPF.
WEST	W.
WITH	W/

VALVES, FITTINGS, ETC.	SYMBOLS
AIR CUSHION CHECK VALVE	ACCV
AIR RELIEF VALVE	ARV
BALL CHECK VALVE	BCV
BALL VALVE	BAV
BLIND FLANGE	B.F.
BURIED GEAR OPERATOR	BO
BUTTERFLY VALVE	BV
CHECK VALVE	CV
ELECTRIC VALVE ACTUATOR	EVA
ELEVATED GEAR OPERATOR	EO
EXPANSION JOINT	EXJ
FIRE HYDRANT	FH
FITTINGS	FTG
FLANGED ADAPTER	FA
FLEXIBLE COUPLING	FC
FLOOR BOX (BUSHING TYPE)	FB
FLOOR STAND	FS
GATE VALVE	GV
HARNESSED FLANGE ADAPTER COUPLING	HFAC
HOSE BIBB	HB
HYDRAULIC VALVE ACTUATOR	HVA
MECHANICAL JOINT PLUG	MJP
PLASTIC BALL VALVE	PBV
PLASTIC CHECK VALVE	PCV
PLUG VALVE	PV
PRESSURE CONTROL VALVE	PCV
SILENT CHECK VALVE	SCV
SLANTING DISC CHECK VALVE	SDCV
UNION	UN
VALVE BOX	VB
VICTAULIC COUPLING (GROOVED ENDS)	VC (G)
VICTAULIC COUPLING (SHOULDERED ENDS)	VC (S)
WALL SLEEVE	WS
WALL PIECE (WITH WATER STOP)	WAP

PIPE	
ASBESTOS CEMENT PIPE	ACP
BLACK STEEL PIPE	BSP
CAST IRON	CI
CAST IRON PIPE	CIP
CAST IRON SOIL PIPE	CISP
CONCRETE PRESSURE PIPE	CPP
COPPER PIPE	CU
CORRUGATED METAL PIPE	CMP
DUCTILE IRON PIPE	DIP
DUCTILE IRON	DI
FIBERGLASS REINFORCED PIPE	FRP
FLANGE	FLG
GALVANIZED STEEL PIPE	GSP
MECHANICAL JOINT	MJ
METAL REINFORCED PLASTIC PIPE	MRPP
POLYETHYLENE PIPE	PP
POLYVINYLCHLORIDE	PVC
REINFORCED CONCRETE PIPE	RCP
RESTRAINED JOINT	RJ
SLIP-ON JOINT	SJ
STEEL PIPE	SP
TIED JOINT	TJ
VITRIFIED CLAY PIPE	VCP

LEGEND

	NEW MAIN THIS PROJECT
20" W.M.	EXISTING WATER MAIN
16" R.W.	EXISTING RAW WATER MAIN
M.H. SAN. S.	EXISTING SANITARY SEWER W/ MANHOLE
10" F.M.	EXISTING FORCE MAIN
T	EXISTING BURIED TELEPHONE
P	EXISTING POWER DUCTS OR CABLES
O.H.P.	OVERHEAD POWER
CATV	EXISTING CABLE TELEVISION
C.B. 15" S.S.	EXISTING STORM SEWER W/CATCH BASIN
F.H.	FIRE HYDRANT
	R/W – RIGHT OF WAY
	℄ – PROPERTY LINE
	NEW MAIN TO BE CONST. UNDER EXISTING UTILITY
	NEW MAIN TO BE CONST. OVER EXISTING UTILITY
P.P.	EXISTING POWER POLE
L.P.	EXISTING LIGHT POLE
SB-1	SOIL BORING
BM 1	BENCH MARK
	EXISTING CHAIN LINK FENCE
	NEW CHAIN LINK FENCE
12.00	EXISTING CONTOUR
12.00	PROPOSED CONTOUR
12.00 +	EXISTING SPOT ELEVATION
12.00	PROPOSED SPOT ELEVATION
	NEW STRUCTURES

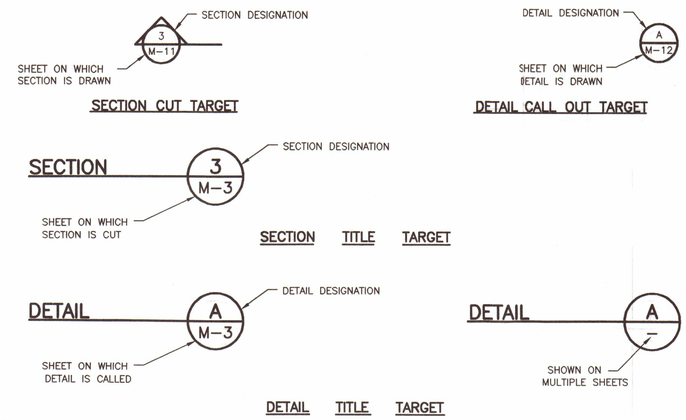

SECTION AND DETAIL NUMBERING SYSTEM

N.T.S.

GENERAL NOTES

1. LOCATIONS, ELEVATIONS AND DIMENSION OF EXISTING UTILITIES STRUCTURES AND OTHER FEATURES ARE SHOWN ACCORDING TO THE BEST INFORMATION AVAILABLE AT THE TIME OF PREPARATION OF THESE PLANS. BUT DO NOT PURPORT TO BE ABSOLUTELY CORRECT. PRIOR TO CONSTRUCTION, THE CONTRACTOR SHALL VERIFY AND AGREE TO BE FULLY RESPONSIBLE FOR ANY AND ALL DAMAGES WHICH MIGHT BE OCCASIONED BY HIS FAILURE TO EXACTLY LOCATE AND PRESERVE ANY AND ALL EXISTING UTILITIES, STRUCTURES, AND OTHER FEATURES AFFECTING HIS WORK. ANYTHING NOT SHOWN ON THESE DRAWINGS SHOULD BE BROUGHT TO THE ATTENTION OF THE ENGINEER AND SHALL NOT CONSITITUTE AN EXTRA, UNLESS APPROVED BY THE ENGINEER.
2. THE CONTRACTOR SHALL CONTACT THE ENGINEER'S OFFICE IMMEDIATELY CONCERNING ANY CONFLICTS ARISING DURING CONSTRUCTION OF ANY IMPROVEMENTS SHOWN ON THESE DRAWINGS.
3. LOCATION OF EXISTING UTILITIES ARE APPROXIMATE, USING THE BEST AVAILABLE INFORMATION AT THE TIME OF PREPARATION OF THE CONTRACT DOCUMENTS. THE CONTRACTOR SHALL VERIFY ALL UTILITIES AND PROVIDED AT LEAST 48 HOURS NOTICE TO THE INDIVIDUAL UTILITY COMPANIES PRIOR TO CONSTRUCTION. CONTACT SUNSHINE CENTER AT 1-800-432-4770.

   FLORIDA POWER & LIGHT
   5657 SOUTH MCINTOSH RD.
   SARASOTA, FL 34233
   (941) 927-4216
   CONTACT: SHANNON WRITE

   TECO PEOPLES GAS
   SARASOTA ENGINEERING
   8261 VICO COURT
   SARASOTA, FL 34240
   (877) 832-6747
   CONTACT: TED FELAGEE

   VERIZON
   1701 RINGLING BLVD.
   SARASOTA, FL 34236
   (941) 952-5332
   CONTACT: BRYAN LANTZ

   COMCAST CABLE
   5205 FRUITVILLE RD.
   SARASOTA, FL 34232
   (941) 342-3577
   CONTACT: PHIL BELANGER

   TOWN OF LONGBOAT KEY
   PUBLIC WORKS DEPARTMENT
   600 GENERAL HARRIS STREET
   LONGBOAT KEY, FL 34228
   (941) 316-1958
   CONTACT: KEVIN WEBB
4. ALL JOINTS SHALL BE RESTRAINED IN ACCORDANCE WITH THE SPECIFICATIONS AND AS SHOWN ON THE DRAWINGS.
5. ALL UNDERGROUND FITTINGS FOR PVC/D.I. SHALL BE DUCTILE IRON, WITH MECHANICAL JOINTS WITH HIGH STRENGTH CORROSION RESISTANT ALLOY T-HEAD BOLTS, EQUAL TO "CORTEN". SUBJECT TO THE APPROVAL OF THE ENGINEER.
6. THE INFORMATION PROVIDED IN THESE PLANS IS SOLELY TO ASSIST THE CONTRATOR IN ASSESSING THE NATURE AND EXTENT OF CONDITIONS WHICH MAY BE ENCOUNTERED DURING THE COURSE OF THE WORK. ALL CONTRACTORS ARE DIRECTED, PRIOR TO BIDDING, TO CONDUCT WHATEVER INVESTIGATIONS THEY MAY DEEM NECESSARY TO ARRIVE AT THEIR OWN CONCLUSION REGARDING THE ACTUAL CONDITIONS THAT WILL BE ENCOUNTERED, AND UPON WHICH THEIR BIDS WILL BE BASED.
7. ALL FIELD TOPOGRAPHIC SURVEYS SHOWN ON DRAWINGS WERE DERIVED FROM A SURVEY PEFORMED BY GEORGE F. YOUNG, 78 SARASOTA CENTER BLVD., SARASOTA, FL 34240. CONTACT: DENNIS HOOVER.
8. ALL SOILS EXPLORATION WORK WAS PERFORMED BY DRIGGERS ENGINEERING, SERVICES, INC., P.O. BOX 5166, CLEARWATER, FLORIDA 34618. THE SUBSURFACE INVESTIGATIONS AND ANALYSIS THAT HAVE BEEN ACCOMPLISHED ARE AVAILABLE FOR REVIEW AS PRESCRIBED FOR IN THE SPECIFICATIONS. THE GEOTECHNICAL REPORT IS PROVIDED FOR THE CONTRACTOR'S CONVENIENCE AND IS FOR GENERAL INFORMATION ONLY. THE CONTRACTOR IS SOLELY RESPONSIBLE FOR HIS OWN INTERPRETATIONS OF THE GEOTECHNICAL DATA. THE REPORT IS REPRESENTED TO ONLY PROVIDE A GENERAL INDICATION OF THE TYPES OF CONDITIONS LIKELY TO BE FOUND IN THE VICINITY. THE CONTRACTOR MAY AT HIS OWN EXPENSE OBTAIN ADDITIONAL GEOTECHNICAL INFORMATION.
9. ALL FIELD TESTING SHALL BE IN ACCORDANCE WITH SPECIFICATIONS AND SHALL BE PERFORMED BY THE CONTRACTOR AND APPROVED BY THE OWNER/ENGINEER PRIOR TO FINAL PAYMENT.
10. THE MINIMUM DEPTH OF COVER FOR ALL BURIED PIPES SHALL BE 36 INCHES UNLESS OTHERWISE SHOWN OR SPECIFIED. THE BEDDING BACKFILL SHALL CONFORM TO THE MINIMUM REQUIREHE SPECIF????MENTS OF THE SPECIFICATIONS.
11. CONTRACTOR SHALL CONFINE HIS WORK WITHIN THE LIMITS OF EXISTING RIGHTS-OF-WAY AND LIMITS OF CONSTRUCTION AS SHOWN ON THE DRAWINGS.
12. THROUGHOUT THESE DRAWINGS, THE CONTRACTOR WILL BE REQUIRED TO TIE-IN TO EXISTING PIPING OR RESTRAIN EXISTING PIPING. CONTRACTORS SHALL VERIFY LOCATION, SIZE AND MATERIAL OF EXISTING MAIN PRIOR TO CONSTRUCTION. NEW PIPELINES SHALL BE TESTED AND ACCEPTED PRIOR TO CONNECTION.
13. THE CONTRACTOR SHALL PROVIDE ALL DEWATERING EQUIPMENT NECESSARY TO KEEP EXCAVATIONS DRY AND SHALL PROVIDE ALL SHEETING, SHORING AND BRACING NECSSARY TO PROTECT ADJACENT STRUCTURES, UTILITIES, EXISTING PAVEMENT, OR TO MINIMIZE TRENCH WIDTH, ALL IN ACCORDANCE WITH THE SPECIFICATIONS.
14. THE CONTRACTOR SHALL PROVIDE AND INSTALL HAY BALES AND/OR SILT SCREENS AROUND THE PROPOSED CONSTRUCTION ACTIVITY, AS NECESSARY, TO PREVENT THE TRANSPORT OF SEDIMENT DOWNSTREAM INTO STREETS, STORM SEWERS, OPEN DITCHES, ETC., AND SHALL PERFORM ALL NECESSARY INSPECTIONS ALL IN ACCORDANCE WITH THE STORMWATER POLLUTION PREVENTION PLAN AND THE SPECIFICATIONS.
15. A LATERAL SEPARATION OF TEN FEET OUT SHALL BE MAINTAINED BETWEEN THE WATER MAIN AND ANY SANITARY SEWER MAINS. IN CASE OF A CROSSING, A VERTICAL SEPARATION OF NOT LESS THAN 18 INCHES SHALL BE MAINTAINED.
16. VERTICAL ALIGNMENT OF THE PROPOSED MAINS AT ALL EXISTING UTILITY CROSSINGS SHALL BE FIELD DETERMINED BY THE CONTRACTOR AND APPROVED BY THE ENGINEER.
17. THE CONTRACTOR SHALL MAINTAIN TRAFFIC AND CONTINUOUS ACCESS TO EACH BUSINESS ADJACENT TO THE WORK.
18. THE CONTRACTOR SHALL BE RESPONSIBLE FOR ANY DAMAGE CAUSED BY CONSTRUCTION OPERATIONS TO EXISTING UTILITIES WHICH HAVE BEEN FIELD LOCATED BY THEIR OWNERS.
19. THE CONTRACTOR SHALL ADHERE TO ALL CONDITIONS AND REQUIREMENTS OF ALL PERMITS, WHICH HAVE BEEN OBTAINED.
20. REFERENCE TO FDOT STANDARD SPECIFICATIONS SHALL MEAN THE CURRENT EDITION OF THE FLORIDA DEPARTMENT OF TRANSPORTATION "STANDARD SPECIFICATIONS FOR ROAD AND BRIDGE CONSTRUCTION."

CONFORMED DRAWINGS
NOVEMBER 2003

JAN 9 2004

ANNE L. ROSS
P.E. NO. 56976
11/18/03

REV. NO.	DATE	DRWN	CHKD	REMARKS
	11/03	JAS	WMS	CONFORMED DRAWINGS

DESIGNED BY: W. SPRIGGS
DRAWN BY: T. HOLT
SHEET CHK'D BY: A. ROSS
CROSS CHK'D BY: G. CASHON
APPROVED BY: A. ROSS
DATE: AUGUST 2003

CDM Camp Dresser & McKee Inc.
consulting engineering construction operations
1819 Main Street, Suite 1002
Sarasota, Florida 34236
Tel: 941-363-9696
FL Cert. of Authorization No. 20

TOWN OF LONGBOAT KEY, FLORIDA

LIFT STATION A IMPROVEMENTS

GENERAL NOTES, LEGEND AND ABBREVIATIONS

PROJECT NO. 2790-38413
FILE NAME: GNXSHOG1.DWG

SHEET NO.
G-1

APPLICANT

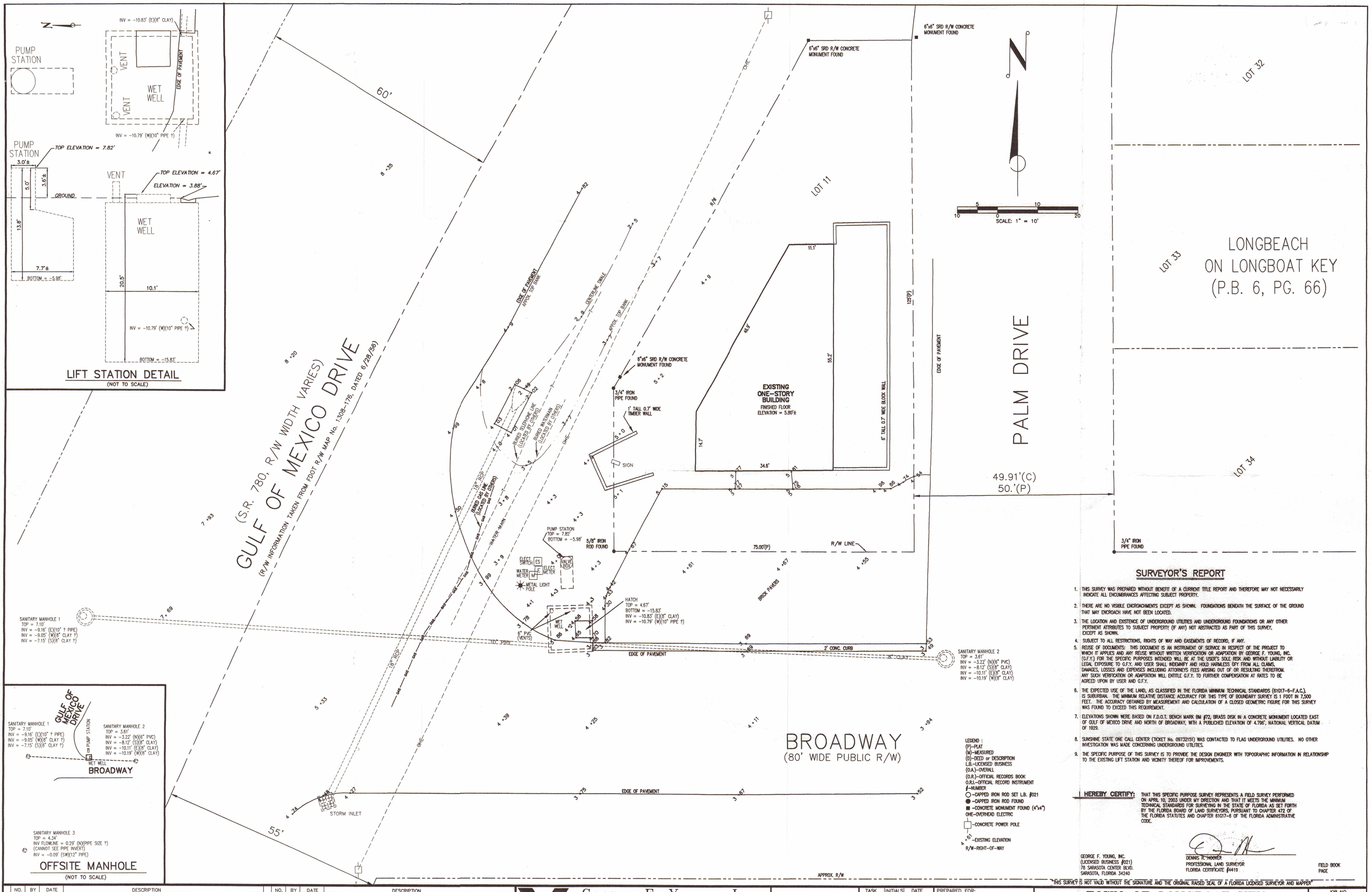

LEGEND :
(P)–PLAT
(M)–MEASURED
(D)–DEED or DESCRIPTION
L.B.–LICENSED BUSINESS
(O.A.)–OVERALL
(O.R.)–OFFICIAL RECORDS BOOK
O.R.I.–OFFICIAL RECORD INSTRUMENT
#–NUMBER
○–CAPPED IRON ROD SET L.B. #021
●–CAPPED IRON ROD FOUND
■–CONCRETE MONUMENT FOUND (4"x4")
OHE–OVERHEAD ELECTRIC
–CONCRETE POWER POLE
4.61 –EXISTING ELEVATION
R/W–RIGHT-OF-WAY

SURVEYOR'S REPORT

1. THIS SURVEY WAS PREPARED WITHOUT BENEFIT OF A CURRENT TITLE REPORT AND THEREFORE MAY NOT NECESSARILY INDICATE ALL ENCUMBRANCES AFFECTING SUBJECT PROPERTY.
2. THERE ARE NO VISIBLE ENCROACHMENTS EXCEPT AS SHOWN. FOUNDATIONS BENEATH THE SURFACE OF THE GROUND THAT MAY ENCROACH HAVE NOT BEEN LOCATED.
3. THE LOCATION AND EXISTENCE OF UNDERGROUND UTILITIES AND UNDERGROUND FOUNDATIONS OR ANY OTHER PERTINENT ATTRIBUTES TO SUBJECT PROPERTY (IF ANY) NOT ABSTRACTED AS PART OF THIS SURVEY, EXCEPT AS SHOWN.
4. SUBJECT TO ALL RESTRICTIONS, RIGHTS OF WAY AND EASEMENTS OF RECORD, IF ANY.
5. REUSE OF DOCUMENTS: THIS DOCUMENT IS AN INSTRUMENT OF SERVICE IN RESPECT OF THE PROJECT TO WHICH IT APPLIES AND ANY REUSE WITHOUT WRITTEN VERIFICATION OR ADAPTATION BY GEORGE F. YOUNG, INC. (G.F.Y.) FOR THE SPECIFIC PURPOSES INTENDED WILL BE AT THE USER'S SOLE RISK AND WITHOUT LIABILITY OR LEGAL EXPOSURE TO G.F.Y. AND USER SHALL INDEMNIFY AND HOLD HARMLESS GFY FROM ALL CLAIMS, DAMAGES, LOSSES AND EXPENSES INCLUDING ATTORNEYS FEES ARISING OUT OF OR RESULTING THEREFROM. ANY SUCH VERIFICATION OR ADAPTATION WILL ENTITLE G.F.Y. TO FURTHER COMPENSATION AT RATES TO BE AGREED UPON BY USER AND G.F.Y.
6. THE EXPECTED USE OF THE LAND, AS CLASSIFIED IN THE FLORIDA MINIMUM TECHNICAL STANDARDS (61G17-6-F.A.C.), IS SUBURBAN. THE MINIMUM RELATIVE DISTANCE ACCURACY FOR THIS TYPE OF BOUNDARY SURVEY IS 1 FOOT IN 7,500 FEET. THE ACCURACY OBTAINED BY MEASUREMENT AND CALCULATION OF A CLOSED GEOMETRIC FIGURE FOR THIS SURVEY WAS FOUND TO EXCEED THIS REQUIREMENT.
7. ELEVATIONS SHOWN WERE BASED ON F.D.O.T. BENCH MARK BM #72, BRASS DISK IN A CONCRETE MONUMENT LOCATED EAST OF GULF OF MEXICO DRIVE AND NORTH OF BROADWAY, WITH A PUBLICHED ELEVATION OF 4.796', NATIONAL VERTICAL DATUM OF 1929.
8. SUNSHINE STATE ONE CALL CENTER (TICKET No. 09732151) WAS CONTACTED TO FLAG UNDERGROUND UTILITIES. NO OTHER INVESTIGATION WAS MADE CONCERNING UNDERGROUND UTILITIES.
9. THE SPECIFIC PURPOSE OF THIS SURVEY IS TO PROVIDE THE DESIGN ENGINEER WITH TOPOGRAPHIC INFORMATION IN RELATIONSHIP TO THE EXISTING LIFT STATION AND VICINITY THEREOF FOR IMPROVEMENTS.

I HEREBY CERTIFY: THAT THIS SPECIFIC PURPOSE SURVEY REPRESENTS A FIELD SURVEY PERFORMED ON APRIL 10, 2003 UNDER MY DIRECTION AND THAT IT MEETS THE MINIMUM TECHNICAL STANDARDS FOR SURVEYING IN THE STATE OF FLORIDA AS SET FORTH BY THE FLORIDA BOARD OF LAND SURVEYORS, PURSUANT TO CHAPTER 472 OF THE FLORIDA STATUTES AND CHAPTER 61G17-6 OF THE FLORIDA ADMINISTRATIVE CODE.

GEORGE F. YOUNG, INC.
(LICENSED BUSINESS #021)
78 SARASOTA CENTER BLVD.
SARASOTA, FLORIDA 34240

DENNIS R. HOOVER
PROFESSIONAL LAND SURVEYOR
FLORIDA CERTIFICATE #4419

FIELD BOOK
PAGE

"THIS SURVEY IS NOT VALID WITHOUT THE SIGNATURE AND THE ORIGINAL RAISED SEAL OF A FLORIDA LICENSED SURVEYOR AND MAPPER"

REVISED	NO.	BY	DATE	DESCRIPTION	REVISED	NO.	BY	DATE	DESCRIPTION
	1					6			
	2					7			
	3					8			
	4					9			
	5					10			

George F. Young, Inc.
ARCHITECTURE • ENGINEERING • ENVIRONMENTAL • LANDSCAPE • PLANNING • SURVEYING • UTILITIES
BRADENTON • GAINESVILLE • NORTH PALM BEACH • ST. PETERSBURG • SARASOTA • TAMPA
ENGINEERING STATE BUSINESS NO. EB-0000021 • SURVEYING STATE BUSINESS NO. LB-0000021
78 SARASOTA CENTER BOULEVARD SARASOTA, FLORIDA 34240
Since 1919 PHONE (941) 371-8362 • FAX (941) 378-3215 • E-MAIL info@georgefyoung.com

DENNIS R. HOOVER, PSM No. 4419
DATE

TASK	INITIALS	DATE
DESIGN		
DRAWN	P.L.	04/15/03
CHECKED	D.R.H.	04/15/03
QUALITY CHK.		
SCALE	1"=10'	

PREPARED FOR:
C.D.M.
1819 MAIN ST., Suite 1002
SARASOTA, FL. 34236

TOWN OF LONGBOAT KEY
LIFT STATION "A"
SPECIFIC PURPOSE SURVEY

JAN 9 2004

JOB NO. 0373002500
SHEET NO. SP-1

APPLICAN